Technical documentation

Unit heater

LH-EC • LH

Contents

Contents ..... Page

Basic unit LH-EC

EC fan unit suitable for stepless control
(1 x 230V, 50Hz)

The fan units with EC motors used with the LH-EC are particularly energy-saving and quiet in comparison with the standard version, despite increased air volumes.
The stepless control of the speed is done by a 0-10 V (DC) signal and is possible with the LM2 ventilation module or alternatively with a stepless speed controller. The speed can therefore always be adjusted precisely to the requirements and the motor efficiency is high across the entire control range thanks to the EC technology.

Protection class IP54, insulation class B, coil protection by integrated temperature monitoring. For motor performance see performance table on page 8 – 11; wired as standard to terminal box

Basic unit LH

Standard configuration

Three-phase motor 3 x 400 V, 50 Hz, star circuit: low speed; Delta circuit: high speed
Degree of protection IP 54, Insulation class F; Ball bearings with special grease filling for -25 bis + 140 °C, for any installed position, maintenance-free
Windings protected against temperature excursion by integral thermo contacts which shut down the motor if it overheats, by interrupting the control circuit in the single-stage/multi-stage switch or controller.
The drive restarts automatically when the temperature in the winding drops below the restart threshold.
Winding protection effective only in conjunction with a single-stage/multi-stage switch or automatic controller. See pages 32 - 36 for wiring options.
Use in conjunction with other, commercially available switches or speed controllers voids the manufacturer's guarantee for the motor.
See performance tables on Pages 12 - 19 for motor output ratings.

Special drives

Single-phase A.C. fan 230 V, 50 Hz, high speed only, low speed with 5-stage switch

LH		25	40	63	100
Motor output max.	(kW)	0,17	0,28	0,39	-
Current consumption max.	(A)	0,73	1,25	1,78	-

Degree of protection IP 54, Insulation class F
Winding protection same as standard motor or thermo contacts connected in series with motor winding by others. The drive restarts automatically when the temperature in the winding drops below the restart threshold. See page 34 for external wiring.

Basic unit

Casing

Sectional frame, welded and galvanised, consisting of pentapost profiles.
Casing panels galvanised sheet steel.
Rear panel incorporates deep-drawn intake nozzle.
Discharge louvre with individually adjustable vanes.

Fan/Motors

Axial fan units consisting of a crescent-shaped fan blade, external rotor motor and protection screen. Silent fans, maintenance-free, suitable for any installed position.
Max. surrounding temperature: -20°C up to +40°C.

Heat exchanger

Co/Al heat exchanger
Five types of heat exchangers per unit heater type for LPHW.
MPHW or steam (code D).

Heat exchanger made of Co/Al, steel header, withdrawable to side
Galvanised sheet-steel frame
LPHW and MPHW threaded inlet/oulet (inch system)
Flange and mating flange for steam

Important note:

(In order to transfer a maximum of the heating capacity, the heat exchangers have to be connected in a way that counterflow operation is provided.)

For LPHW or MPHW: threaded adapters for PN 16 up to 140°C
Water inlet on air outlet at top/bottom
Water outlet on air intake at top/bottom
Connections on right/left hand side in direction of air flow
See performance table for pipe connection sizes

For steam: flange and mating flange for saturated steam, max. 9 bar
Steam connection at top
Condensate return at bottom
Connection on left hand side only in direction of air flow
See performance table for pipe connection sizes.

alternative:

Steel / galvanised heat exchanger.

Heat exchanger and header both made of galvanised steel and withdrawable to side
suitable for LPHW, MPHW or steam D
Frame made of galvanised sheet steel
LPHW and MPHW threaded inlet/oulet (inch system)
Flange and mating flange for steam

Protective measures:
In order to avoid overheating damage to the motor electronics in LH-EC units, it must be ensured that the feeding of the heating medium to the heat exchanger is interrupted when the fan is not running.

Basic unit

LH

Electric heating coil
incl. highlimit lock out

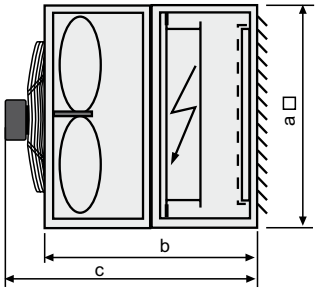

Dimensions:

LH	25	40	63	100
a	500	630	800	1000
b	600	600	600	680
c	710	715	720	810

Heating output stages:

LH	25	40	63	100
a	12 kW	20 kW	25 kW	35 kW
b	Höhere Leistungen auf Anfrage			

Circuiting:

12 kW:	4-stage	1/4, 2/4, 3/4, 4/4
20 kW:	4-stage	1/4, 2/4, 3/4, 4/4
25 kW:	5-stage	1/5, 2/5, 3/5, 4/5, 5/5
35 kW:	5-stage	1/5, 2/5, 3/5, 4/5, 5/5

To avoid overheating, pay attention to the following minimum air volumes:

LH		25	40	63	100
LR horizontal	Vmin (m³/h)	800	1600	2500	4000
LR vertikal	Vmin (m³/h)	1000	2200	3200	5000

Protective measures:
In any case it has to be secured that the electric heater is switched off when the air volume is falling below the indicated minimum. Additionally, the electric heater may only be set into operation by one or several magnetic switches whose control circuit leads over the automatic overheating controllers wired in line.

Basic unit

LH-ATEX

Casing

Explosion proof design for Ex-zone 2
II 3G c IIB T4 X

Suitable for wall or ceiling installation, fresh air, return air or mixed air operation, heating or ventilation

Sectional frame, welded and galvanised, consisting of pentapost profiles.
Casing panels galvanised sheet steel.
Rear panel incorporates deep-drawn intake nozzle.
Discharge louvre with individually adjustable vanes.

LH-ATEX	25	40	63	100
A	500	630	800	1000
B	300	300	300	340
C	345	350	355	405

Fan-motor assembly

Complete fan-motor-protection grille assembly, axial fan with aluminium impeller, impeller wings with plastic edges, maintenance-free low-noise motor, suitable for any installation position. Three-phase motor 3 x 400 V, 50 Hz, degree of protection IP44, thermal cotegory CL F.
Star circuit: low speed, delta circuit: high speed
Max. surrounding temperature: -20°C up to +40°C, full motor protection by integrated thermistors.

LH-ATEX		25	40	63	100
Motor output max.	(kW)	0,14/0,11	0,33/0,25	0,33/0,24	0,50/0,34
Speed	(min^{-1})	1350/1000	1350/1000	900/700	900/700
Current consumption max.	(A)	0,28/0,19	0,66/0,44	0,60/0,40	0,89/0,55

Heat exchanger

Heat exchanger Co/Al
4 types of heat exchangers per unit heater type for LPHW or MPHW.
Heat exchanger made of Co/Al, steel header, withdrawable to side, galvanized sheetsteel frame, threaded connections.
Notice: Threaded connections for PN 16 up to 140°C, water inlet on air outlet side top/bottom, water outlet on air intake side top/bottom. Connections lhs/rhs in direction of air flow, see performance table for connection sizes.

Heat exchanger galvanized steel
3 types of heat exchangers per unit heater type for LPHW or MPHW.
Heat exchanger and header both made of galvanized steel, withdrawable to side. Frame made of galvanized sheet steel, connections with flange / mating flange.

Accessories

Explosion proof ATEX-terminal box
Fitted and wired,

Thermistor triggering unit
Suitable for installation in wiring board on site,
Notice: Triggering unit to be fitted outside the Ex-zone only

A1Ü controller
For full motor protection, single speed operation
control voltage 3 x 400 V, operating voltage 230 V, capacity 3 kW, degree of protection IP54
Notice: A1Ü controller (LH 40-ATEX, LH 63-ATEX, LH 100-ATEX only) to be fitted outside the Ex-zone only

Explosion-proof switch
For A1Ü automatic controller, operating voltage 690 V, max. current 16 A (4A), degree of protection IP 66

Dimensions, basic unit LH-EC / LH

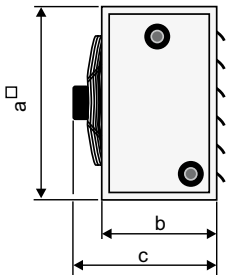

Dimensions, basic unit LH-EC / LH 20 - 100

LH-EC / LH	a	b	c
25	500	300	410
40	630	300	415
63	800	300	420
100	1000	340	485

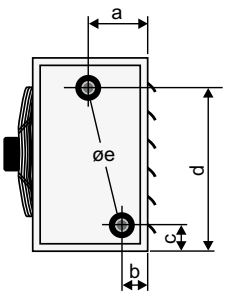

Connections, LH-EC / LH 25 - 100, Type 1 - 4, Co/Al

LH-EC / LH	a	b	c	d	Øe
25-1	98	68	72	425	¾"
25-2/-3/-4	158	68	75	425	1"
40-1	98	68	76	554	¾"
40-2/-3/-4	143	83	80	550	1"
63-1	103	63	75	726	1"
63-2/-3/-4	143	83	78	722	1¼"
100-1	124	84	95	906	1"
100-2/-3/-4	179	89	89	912	1½"

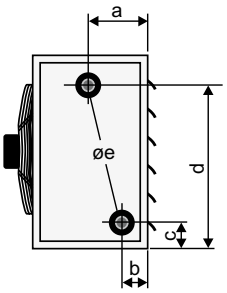

Connections, LH-EC / LH 25 - 100, Type 1 - 3, st.galv.

LH-EC / LH	a	b	c	d	Øe
25-1	100	66	86	409	¾"
24-2/-3/-4	158	68	86	405	1"
40-1	100	66	91	534	¾"
40-2/-3/-4	158	68	91	530	1"
63-1	98	68	86	705	1"
63-2/-3/-4	153	73	86	695	1¼"
100-1	118	88	86	885	1"
100-2/-3/-4	168	98	86	865	1½"

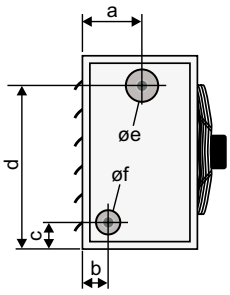

Connections, LH-EC / LH 25 - 100, Type steam, Co/Al

LH-EC / LH	a	b	c	d	Øe	Øf
25	160	90	61	421	DN40	DN20
40	158	99	60	561	DN40	DN20
63	152	84	63	725	DN50	DN25
100	165	100	85	894	DN65	DN32

Performance tables

LH-EC 25

for LPHW										for saturated steam		for LPHW							
Type		1		2		3		4			D			1		2		3	
Speed [min⁻¹]		1000		1000		1000		1000			1000			1000		1000		1000	
Air vol. $\dot{V}_0$ [m³/h]		2400		2300		2050		1950			2400			2400		2300		2050	
		$\dot{Q}_0$	t_{LA}	$\dot{Q}_0$	t_{LA}	$\dot{Q}_0$	t_{LA}	$\dot{Q}_0$	t_{LA}		$\dot{Q}_0$	t_{LA}		$\dot{Q}_0$	t_{LA}	$\dot{Q}_0$	t_{LA}	$\dot{Q}_0$	t_{LA}
	t_{LE}[°C]	kW	°C	kW	°C	kW	°C	kW	°C	t_{LE}[°C]	kW	°C	t_{LE}[°C]	kW	°C	kW	°C	kW	°C
	- 15	11,5	-2	16,4	4	19,4	10	24,4	18	- 15	28,5	16	- 15	25,4	13	35,7	26	41,5	39
	- 10	10,2	2	14,7	7	17,4	13	21,9	20	- 10	27,0	20	- 10	24,1	17	33,8	30	39,4	42
	- 5	9,0	5	12,9	11	15,4	16	19,3	22	- 5	25,6	24	- 5	22,8	21	32,0	33	37,3	45
LPHW	± 0	7,8	9	11,9	14	13,4	18	16,9	24	± 0	24,2	28	**PHW**	21,5	25	30,2	37	35,2	48
45/35	+ 5	6,6	13	9,6	17	11,4	21	14,4	26	**1,1 bar** + 5	22,9	32	**110/90**	20,2	29	28,4	40	33,1	51
	+ 10	5,4	17	7,9	20	9,5	24	12,0	28	+ 10	21,5	36	+ 10	18,9	33	26,6	44	31,1	54
	+ 15	4,3	20	6,3	23	7,6	26	9,6	30	+ 15	20,2	40	+ 15	17,7	37	24,9	47	29,1	57
	+ 20	3,1	24	4,7	26	5,7	28	7,2	31	+ 20	18,8	44	+ 20	16,4	41	23,2	50	27,1	60
	- 15	12,8	-1	18,2	6	21,4	13	26,9	22	- 15	30,6	19	- 15	27,9	16	39,0	30	45,2	44
	- 10	11,5	3	16,4	9	19,4	16	24,3	24	- 10	29,1	23	- 10	26,6	20	37,2	34	43,1	47
	- 5	10,3	7	14,7	13	17,4	18	21,8	26	- 5	27,7	27	- 5	25,2	24	35,3	37	41,0	50
LPHW	± 0	9,0	11	13,0	16	15,4	21	19,3	28	± 0	26,3	31	**PHW**	23,9	28	33,5	41	38,9	53
50/40	+ 5	7,8	14	11,3	19	13,4	24	16,8	30	**1,5 bar** + 5	24,9	35	**120/100**	22,6	32	31,7	44	36,8	56
	+ 10	6,6	18	9,6	22	11,4	26	14,4	32	+ 10	23,6	39	+ 10	21,3	36	29,9	48	34,7	59
	+ 15	5,5	22	8,0	25	9,5	29	12,0	33	+ 15	22,2	42	+ 15	20,1	40	28,2	51	32,7	62
	+ 20	4,3	25	6,3	28	7,6	31	9,7	35	+ 20	20,9	46	+ 20	18,8	44	26,4	55	30,7	65
	- 15	12,6	-1	18,3	6	21,8	13	27,5	22	- 15	32,6	21	- 15	28,2	16	39,7	31	46,2	45
	- 10	11,4	3	16,5	9	19,8	16	25,0	25	- 10	31,2	25	- 10	26,8	20	37,8	34	44,0	48
	- 5	10,1	7	14,8	13	17,7	19	22,4	27	- 5	29,7	29	- 5	25,5	24	35,9	38	41,9	51
LPHW	± 0	8,9	10	13,1	16	15,8	22	19,9	29	**2,0** ± 0	28,3	33	**PHW**	24,2	28	34,1	42	39,8	55
60/40	+ 5	7,7	14	11,4	19	13,8	24	17,5	31	**bar** + 5	26,9	37	**130/100**	22,9	32	32,3	45	37,7	58
	+ 10	6,6	18	9,7	22	11,8	27	15,0	32	+ 10	25,6	41	+ 10	21,6	36	30,5	49	35,7	61
	+ 15	5,4	22	8,1	25	9,9	29	12,6	34	+ 15	24,2	45	+ 15	20,4	40	28,8	52	33,7	64
	+ 20	4,3	25	6,5	29	8,0	32	10,2	36	+ 20	22,9	49	+ 20	19,1	44	27,1	55	31,7	67
	- 15	15,2	2	21,9	10	25,9	19	32,6	29	- 15	35,6	24	- 15	28,5	17	40,3	32	47,2	46
	- 10	14,0	6	20,1	14	23,8	21	30,0	32	- 10	34,2	29	- 10	27,2	21	38,4	35	45,0	49
	- 5	12,7	10	18,3	17	21,8	24	27,4	34	- 5	32,7	33	- 5	25,8	25	36,6	39	42,9	53
LPHW	± 0	11,5	13	16,6	20	19,8	27	24,9	36	**3,0** ± 0	31,3	37	**PHW**	24,5	29	24,8	42	40,8	56
70/50	+ 5	10,3	17	14,9	24	17,8	30	22,4	38	**bar** + 5	29,9	41	**140/100**	23,2	33	33,0	46	38,7	59
	+ 10	9,1	21	13,2	27	15,8	33	30,0	40	+ 10	28,5	45	+ 10	21,9	37	31,2	49	36,7	62
	+ 15	7,9	25	11,5	30	13,9	35	17,6	42	+ 15	27,2	49	+ 15	20,7	41	29,4	53	34,6	65
	+ 20	6,7	28	9,9	33	12,0	38	15,2	43	+ 20	25,8	52	+ 20	19,4	44	27,7	56	32,6	68
	- 15	17,8	5	25,4	14	29,9	24	37,4	36	- 15	39,8	29	- 15	30,7	19	43,6	35	49,9	50
	- 10	16,5	9	23,6	18	27,8	27	34,8	38	- 10	38,3	33	- 10	29,3	23	41,1	38	47,7	53
	- 5	15,3	13	21,8	21	25,8	30	32,3	41	- 5	36,8	37	- 5	28,0	27	39,2	42	45,6	56
LPHW	± 0	14,0	16	20,1	25	23,7	33	29,8	43	**5,0** ± 0	35,4	41	**PHW**	26,6	31	37,4	46	43,5	60
80/60	+ 5	12,8	20	18,3	28	21,7	35	27,3	45	**bar** + 5	24,0	45	**140/110**	25,3	35	35,6	49	41,4	63
	+ 10	11,6	24	16,6	31	19,7	38	24,8	47	+ 10	32,6	49	+ 10	24,0	39	33,8	53	39,3	66
	+ 15	10,4	28	15,0	34	17,8	41	22,4	49	+ 15	31,2	53	+ 15	22,8	43	32,0	46	37,3	69
	+ 20	9,2	32	13,3	37	15,9	43	20,0	51	+ 20	29,8	57	+ 20	21,5	47	30,3	60	35,3	72
	- 15	20,4	8	28,9	18	33,9	29	42,2	42	- 15	49,0	35							
	- 10	19,1	12	27,1	22	31,7	32	39,6	45	- 10	43,5	39							
	- 5	17,0	15	25,3	25	29,7	35	37,0	47	- 5	42,0	43							
LPHW	± 0	16,5	19	23,5	29	27,6	38	34,4	50	**9,0** ± 0	40,5	47							
90/70	+ 5	15,3	23	21,7	32	25,6	41	31,9	52	**bar** + 5	39,1	52							
	+ 10	14,0	27	20,0	35	23,6	44	29,5	54	+ 10	37,7	56							
	+ 15	12,8	31	18,3	39	21,6	46	27,0	56	+ 15	36,3	60							
	+ 20	11,6	35	16,6	42	19,7	49	24,6	58	+ 20	34,9	64							
Motor output [kW] (1 x 230 V)		max. 0,165		max. 0,165		max. 0,165		max. 0,165			max. 0,165			max. 0,165		max. 0,165		max. 0,165	
Curr. Consumpt. [A] (1 x 230 V)		max. 1,35		max. 1,35		max. 1,35		max. 1,35			max. 1,35			max. 1,35		max. 1,35		max. 1,35	
Air throw, wall mounted [m]*		17,5		16,5		15,5		14,5			17,5			17,5		16,5		15,5	
Air throw, ceiling mount. [m]*		6,2		6,0		5,6		5,4			6,2			6,2		6,0		5,6	
Sound pressure level dB[A]**		52		52		52		52			52			52		52		52	
Water capacity [litres]		0,7		1,0		1,1		1,8						0,7		1,0		1,1	
Heat exchanger connections		R ¾"		R 1"		R 1"		R 1"			DN 40 - DN 20			R ¾"		R 1"		R 1"	

* Bei $t_{LA} - t_{Raum}$ = 10K

** Sound pressure level measured 5 m from intake, room with average absorption; enclosed space approx. 1500 m³.

Performance tables

LH-EC 40

for LPHW											for saturated steam		for LPHW							
Type		**1**		**2**		**3**		**4**			**D**			**1**		**2**		**3**	
Speed [min⁻¹]		1350		1350		1350		1350			1350			1350		1350		1350	
Air vol. $\dot{V}_0$ [m³/h]		3800		3700		3400		3050			3800			3800		3700		3400	
		$\dot{Q}_0$	t_{LA}	$\dot{Q}_0$	t_{LA}	$\dot{Q}_0$	t_{LA}	$\dot{Q}_0$	t_{LA}		$\dot{Q}_0$	t_{LA}		$\dot{Q}_0$	t_{LA}	$\dot{Q}_0$	t_{LA}	$\dot{Q}_0$	t_{LA}
	t_{LE}[°C]	kW	°C	kW	°C	kW	°C	kW	°C	t_{LE}[°C]	kW	°C	t_{LE}[°C]	kW	°C	kW	°C	kW	°C
	- 15	21,0	0	25,2	3	33,8	11	38,6	19	- 15	46,0	17	- 15	46,0	17	54,8	24	71,7	41
	- 10	18,8	3	22,5	6	30,3	14	34,7	21	- 10	43,7	21	- 10	43,6	21	52,0	28	68,0	44
	- 5	16,6	7	19,9	10	26,9	17	30,7	23	- 5	41,4	25	- 5	41,2	25	49,2	32	64,4	47
LPHW	± 0	14,4	11	17,3	13	23,5	19	26,9	25	**1,1** ± 0	39,2	29	**PHW** ± 0	38,9	29	48,4	35	60,8	50
45/35	+ 5	12,2	14	14,7	16	18,3	20	23,1	27	**bar** + 5	37,0	33	**110/90** + 5	36,6	32	43,6	39	57,3	53
	+ 10	10,1	18	12,2	20	15,0	23	19,3	28	+ 10	35,8	37	+ 10	34,3	36	40,9	42	53,8	56
	+ 15	8,0	21	9,7	23	11,7	25	15,6	30	+ 15	32,7	40	+ 15	32,1	40	38,3	46	50,4	59
	+ 20	5,9	25	7,2	26	8,4	27	11,9	32	+ 20	30,5	44	+ 20	29,8	44	35,6	49	47,0	62
	- 15	23,3	1	27,9	5	37,3	14	42,4	22	- 15	49,4	19	- 15	50,3	20	60,0	28	78,0	46
	- 10	21,0	5	25,2	8	33,7	17	38,4	24	- 10	47,1	24	- 10	47,9	24	57,1	32	74,3	49
	- 5	18,8	9	22,5	12	30,2	20	34,5	26	- 5	44,8	28	- 5	45,5	28	54,3	35	70,7	52
LPHW	± 0	16,6	12	19,9	15	26,8	22	30,6	28	**1,5** ± 0	42,5	31	**PHW** ± 0	43,2	32	51,5	39	67,1	55
50/40	+ 5	14,4	16	17,3	18	23,4	25	26,8	30	**bar** + 5	40,3	35	**120/100** + 5	40,9	36	48,7	43	63,5	58
	+ 10	12,3	19	14,7	22	20,1	27	23,0	32	+ 10	38,1	39	+ 10	38,6	40	46,0	46	60,0	61
	+ 15	10,2	23	12,2	25	16,8	30	19,3	34	+ 15	36,0	43	+ 15	36,3	43	43,3	50	56,6	64
	+ 20	8,1	26	9,7	28	13,5	32	15,6	35	+ 20	33,8	47	+ 20	34,1	47	40,6	53	53,2	67
	- 15	23,3	1	28,1	5	38,3	15	44,0	23	- 15	52,7	22	- 15	51,1	21	60,9	29	79,9	47
	- 10	21,1	5	25,4	9	34,8	18	40,0	25	- 10	50,3	26	- 10	48,6	25	58,1	32	76,2	51
	- 5	18,9	9	22,7	12	31,3	20	36,1	28	- 5	48,1	30	- 5	46,3	29	55,2	36	72,6	54
LPHW	± 0	16,7	12	20,1	15	27,9	23	32,2	30	**2,0** ± 0	45,8	34	**PHW** ± 0	43,9	32	52,4	40	69,6	57
60/40	+ 5	14,5	16	17,5	19	24,5	26	28,3	32	**bar** + 5	43,6	38	**130/100** + 5	41,6	36	49,7	43	65,4	60
	+ 10	12,4	19	15,0	22	21,1	28	24,5	33	+ 10	41,4	42	+ 10	39,3	40	46,9	47	61,9	63
	+ 15	10,3	23	12,5	25	17,8	30	207,0	35	+ 15	39,2	46	+ 15	37,0	44	44,2	50	58,5	66
	+ 20	8,2	27	10,0	28	14,5	33	17,0	37	+ 20	37,0	49	+ 20	34,8	48	41,6	54	55,0	69
	- 15	28,0	5	33,6	9	45,3	20	51,7	30	- 15	57,6	25	- 15	51,8	21	61,9	29	81,8	49
	- 10	25,7	8	20,8	13	41,7	23	47,7	32	- 10	55,2	29	- 10	49,4	25	49,1	33	78,1	52
	- 5	23,4	12	28,2	16	38,2	26	43,7	34	- 5	52,9	33	- 5	47,0	29	56,2	37	74,5	55
LPHW	± 0	21,2	16	25,5	19	34,7	29	39,8	37	**3,0** ± 0	50,6	37	**PHW** ± 0	44,7	33	53,4	41	70,9	58
70/50	+ 5	19,0	19	23,9	23	31,3	31	35,9	39	**bar** + 5	48,4	41	**140/100** + 5	42,4	37	50,7	44	67,3	62
	+ 10	16,9	23	20,3	26	27,9	34	32,1	41	+ 10	46,2	45	+ 10	40,1	41	48,0	48	63,8	65
	+ 15	14,7	26	17,8	29	24,6	36	28,4	42	+ 15	44,0	49	+ 15	37,8	44	45,3	51	60,3	67
	+ 20	12,6	30	15,2	32	21,3	39	24,6	44	+ 20	41,8	53	+ 20	35,6	48	42,6	55	56,9	70
	- 15	32,5	8	39,0	13	52,1	26	59,1	36	- 15	64,3	30	- 15	55,4	24	66,1	32	86,2	52
	- 10	30,2	12	36,2	16	48,5	29	55,1	39	- 10	61,9	34	- 10	53,0	28	63,2	36	82,5	56
	- 5	28,0	15	33,5	20	44,9	31	51,1	41	- 5	59,6	38	- 5	50,6	32	60,3	40	78,8	59
LPHW	± 0	25,7	19	30,8	23	41,4	34	47,2	43	**5,0** ± 0	57,3	42	**PHW** ± 0	48,2	36	57,5	44	75,2	62
80/60	+ 5	23,5	23	28,2	27	38,0	37	43,3	46	**bar** + 5	55,0	46	**140/110** + 5	45,9	39	54,7	47	71,6	65
	+ 10	21,3	26	25,6	30	34,6	40	39,5	48	+ 10	52,7	50	+ 10	43,6	43	51,9	51	68,1	68
	+ 15	19,1	30	23,0	33	31,2	42	35,7	50	+ 15	50,5	54	+ 15	41,3	47	49,2	54	64,6	71
	+ 20	17,0	33	20,4	37	27,9	45	32,0	52	+ 20	48,3	58	+ 20	39,0	51	46,6	58	61,2	74
	- 15	37,1	11	44,3	17	58,7	31	66,4	43	- 15	72,8	36							
	- 10	34,7	15	41,6	20	55,1	34	62,3	45	- 10	70,3	40							
	- 5	32,4	18	38,8	24	51,5	37	58,3	48	- 5	68,0	44							
LPHW	± 0	30,1	22	36,1	27	48,0	40	54,4	50	**9,0** ± 0	65,6	49							
90/70	+ 5	27,9	26	33,4	31	44,5	42	50,5	52	**bar** + 5	63,3	53							
	+ 10	25,7	30	30,7	34	41,1	45	46,7	54	+ 10	61,0	57							
	+ 15	23,5	33	28,1	37	37,7	48	42,9	57	+ 15	58,8	61							
	+ 20	21,3	37	25,5	41	34,4	50	39,1	59	+ 20	56,6	65							
Motor output [kW] (1 x 230 V)		max. 0,31		max. 0,31		max. 0,31		max. 0,31			max. 0,31			max. 0,31		max. 0,31		max. 0,31	
Curr. Consumpt. [A] (1 x 230 V)		max. 1,4		max. 1,4		max. 1,4		max. 1,4			max. 1,4			max. 1,4		max. 1,4		max. 1,4	
Air throw, wall mounted [m]*		26		25		22,5		19,5			26			26		25		22,5	
Air throw, ceiling mount. [m]*		6,1		5,9		5,5		5,0			6,1			6,1		5,9		5,5	
Sound pressure level dB[A]**		55		55		55		55			55			55		55		55	
Water capacity [litres]		1,0		1,5		2,0		2,5						1,0		1,5		2,0	
Heat exchanger connections		R ¾"		R 1"		R 1"		R 1"			DN 40 - DN 20			R ¾"		R 1"		R 1"	

* Bei $t_{LA} - t_{Raum} = 10K$

** Sound pressure level measured 5 m from intake, room with average absorption; enclosed space approx. 1500 m³.

Performance tables

LH-EC 63

for LPHW										for saturated steam	for LPHW							
Type		1		2		3		4			D			1		2		3	
Speed [min⁻¹]		1000		1000		1000		1000			1000			1000		1000		1000	
Air vol. $\dot{V}_0$ [m³/h]		5500		5400		5000		4800			5500			5500		5400		5000	
		$\dot{Q}_0$	t_{LA}	$\dot{Q}_0$	t_{LA}	$\dot{Q}_0$	t_{LA}	$\dot{Q}_0$	t_{LA}		$\dot{Q}_0$	t_{LA}		$\dot{Q}_0$	t_{LA}	$\dot{Q}_0$	t_{LA}	$\dot{Q}_0$	t_{LA}
	t_{LE}[°C]	kW	°C	kW	°C	kW	°C	kW	°C	t_{LE}[°C]	kW	°C	t_{LE}[°C]	kW	°C	kW	°C	kW	°C
	- 15	34,4	2	44,7	7	53,6	13	65,3	21	- 15	70,6	19	- 15	73,8	21	95,4	32	112,6	45
	- 10	30,8	5	40,0	10	48,1	16	58,7	23	- 10	70,4	25	- 10	70,0	24	90,5	35	106,8	48
	- 5	27,3	9	35,4	13	42,6	18	52,2	25	- 5	66,8	28	- 5	66,3	28	85,7	39	101,2	51
LPHW	± 0	23,8	12	30,9	16	37,3	21	45,7	27	**1,1** ± 0	63,2	32	**PHW** ± 0	62,6	32	81,0	42	95,6	54
45/35	+ 5	20,4	16	26,4	19	32,0	23	39,4	28	**bar** + 5	59,7	36	**110/90** + 5	59,0	36	76,3	45	90,1	56
	+ 10	17,0	19	22,0	22	26,8	26	33,1	30	+ 10	56,2	40	+ 10	55,4	39	71,6	49	84,7	59
	+ 15	13,7	22	17,7	25	21,6	28	26,9	32	+ 15	52,8	43	+ 15	51,9	43	67,0	52	79,3	62
	+ 20	10,4	26	13,4	27	16,5	30	28,7	33	+ 20	49,4	47	+ 20	48,4	46	62,5	55	74,1	65
	- 15	37,9	3	49,2	9	58,9	16	71,6	25	- 15	76,0	22	- 15	80,5	24	104,1	36	122,3	50
	- 10	34,3	7	44,5	12	53,3	19	64,9	27	- 10	75,8	27	- 10	76,7	28	99,1	40	116,6	53
	- 5	30,8	10	39,9	15	47,9	21	58,4	28	- 5	72,2	31	- 5	73,0	32	94,3	43	110,9	56
LPHW	± 0	27,3	14	35,4	18	42,5	24	51,9	30	**1,5** ± 0	68,6	35	**PHW** ± 0	69,3	35	89,5	46	105,3	59
50/40	+ 5	23,8	17	30,9	21	37,2	26	45,5	32	**bar** + 5	65,1	39	**120/100** + 5	65,6	39	84,7	50	99,8	62
	+ 10	20,4	21	26,5	24	32,0	29	39,2	34	+ 10	61,6	43	+ 10	62,0	43	80,1	53	94,3	65
	+ 15	17,1	24	22,1	27	26,8	31	33,0	35	+ 15	58,2	46	+ 15	58,5	46	75,4	56	88,9	68
	+ 20	13,8	28	17,8	30	21,7	33	26,9	37	+ 20	54,8	50	+ 20	54,9	50	70,9	59	83,6	70
	- 15	38,9	4	50,4	10	61,0	17	75,0	26	- 15	84,8	26	- 15	82,3	25	106,4	37	125,6	62
	- 10	35,3	7	45,7	13	55,5	20	68,4	28	- 10	81,1	30	- 10	78,5	29	101,5	41	119,9	55
	- 5	31,8	11	41,1	16	50,0	23	61,8	30	- 5	77,5	34	- 5	74,8	32	96,6	44	114,2	58
LPHW	± 0	28,3	14	36,6	19	44,6	25	55,3	32	**2,0** ± 0	73,9	38	**PHW** ± 0	71,1	36	91,8	48	108,6	61
60/40	+ 5	24,9	18	32,1	22	39,3	27	48,8	34	**bar** + 5	70,3	42	**130/100** + 5	67,4	40	87,1	51	103,1	64
	+ 10	21,4	21	27,7	25	34,0	30	42,5	36	+ 10	66,8	45	+ 10	63,8	44	82,4	54	97,6	67
	+ 15	18,1	25	23,3	28	28,8	32	36,1	37	+ 15	63,3	49	+ 15	60,2	47	77,8	58	92,2	70
	+ 20	14,7	28	18,9	31	23,6	34	29,8	39	+ 20	59,9	53	+ 20	56,7	51	73,2	61	86,9	72
	- 15	46,0	7	59,7	14	71,8	23	87,6	33	- 15	92,8	30	- 15	81,1	26	108,8	28	128,9	53
	- 10	42,4	11	55,0	18	69,2	26	80,9	36	- 10	89,0	34	- 10	80,3	29	103,8	42	123,2	57
	- 5	38,8	14	50,3	21	60,7	28	74,3	38	- 5	85,3	38	- 5	76,6	33	99,0	45	117,5	60
LPHW	± 0	35,3	18	45,7	24	55,3	31	67,8	40	**3,0** ± 0	81,7	42	**PHW** ± 0	72,9	37	94,1	49	111,9	63
70/50	+ 5	31,8	22	41,2	27	49,9	34	61,3	42	**bar** + 5	78,1	46	**140/100** + 5	69,2	41	89,4	52	106,3	66
	+ 10	28,4	25	36,7	30	44,6	36	55,0	43	+ 10	74,6	49	+ 10	65,6	45	84,7	56	100,8	69
	+ 15	25,0	28	32,3	33	39,4	38	48,7	45	+ 15	71,1	53	+ 15	62,0	48	80,1	59	95,4	71
	+ 20	21,6	32	27,9	36	34,2	41	42,4	47	+ 20	67,6	57	+ 20	58,5	52	75,5	62	90,1	74
	- 15	53,1	11	68,8	19	82,3	29	99,8	40	- 15	103,6	35	- 15	89,1	28	115,0	41	135,3	57
	- 10	49,4	14	64,1	21	76,7	31	93,1	42	- 10	96,6	37	- 10	85,2	32	110,0	45	129,5	60
	- 5	45,8	18	59,4	25	71,1	34	86,4	445	- 5	96,1	43	- 5	81,4	36	105,1	49	123,8	63
LPHW	± 0	42,3	22	54,7	28	65,7	37	79,9	47	**5,0** ± 0	92,4	47	**PHW** ± 0	77,7	40	100,3	52	118,2	66
80/60	+ 5	38,7	25	50,2	32	60,3	39	73,5	49	**bar** + 5	88,7	51	**140/110** + 5	74,0	43	95,8	46	112,6	69
	+ 10	35,3	29	45,6	35	54,9	42	67,1	51	+ 10	85,2	55	+ 10	70,4	47	90,8	59	107,1	72
	+ 15	31,8	32	41,2	38	49,7	44	60,8	52	+ 15	81,6	59	+ 15	66,8	51	86,1	62	101,7	75
	+ 20	28,4	36	36,8	40	44,5	47	54,6	54	+ 20	78,1	63	+ 20	63,2	55	91,5	65	96,3	78
	- 15	60,0	14	77,8	23	92,6	34	111,6	47	- 15	117,3	42							
	- 10	55,4	20	73,0	27	86,9	37	104,9	49	- 10	113,4	46							
	- 5	52,1	23	68,3	30	81,3	40	98,2	51	- 5	109,6	50							
LPHW	± 0	49,1	25	63,6	33	75,8	43	91,7	54	**9,0** ± 0	105,9	54							
90/70	+ 5	45,6	29	59,0	36	70,4	45	85,2	56	**bar** + 5	102,2	58							
	+ 10	42,0	32	54,4	39	65,0	48	78,8	58	+ 10	96,6	62							
	+ 15	38,6	36	49,9	42	59,7	50	72,5	60	+ 15	95,0	66							
	+ 20	35,1	39	45,5	45	54,5	53	66,3	62	+ 20	91,4	70							
Motor output [kW] (1 x 230 V)		max. 0,40		max. 0,40		max. 0,40		max. 0,40			max. 0,40			max. 0,40		max. 0,40		max. 0,40	
Curr. Consumpt. [A] (1 x 230 V)		max. 1,8		max. 1,8		max. 1,8		max. 1,8			max. 1,8			max. 1,8		max. 1,8		max. 1,8	
Air throw, wall mounted [m]*		27		26		23		22			27			27		26		23	
Air throw, ceiling mount. [m]*		7,3		7,1		6,3		6,0			7,3			7,3		7,1		6,3	
Sound pressure level dB[A]**		56		56		56		56			56			56		56		56	
Water capacity [litres]		2,5		3,5		3,5		5,5						2,5		3,5		3,5	
Heat exchanger connections		R 1"		R 1¼"		R 1¼"		R 1¼"			DN 50 - DN 25			R 1"		R 1¼"		R 1¼"	

* Bei $t_{LA} - t_{Raum}$ = 10K

** Sound pressure level measured 5 m from intake, room with average absorption; enclosed space approx. 1500 m³.

Performance tables

LH-EC 100

for LPHW										for saturated steam			for LPHW							
Type		**1**		**2**		**3**		**4**			**D**			**1**		**2**		**3**	
Speed [min⁻¹]		900		900		900		900			900			900		900		900	
Air vol. $\dot{V}_0$ [m³/h]		9400		9300		8700		8200			9400			9400		9300		8700	
		$\dot{Q}_0$	t_{LA}	$\dot{Q}_0$	t_{LA}	$\dot{Q}_0$	t_{LA}	$\dot{Q}_0$	t_{LA}		$\dot{Q}_0$	t_{LA}		$\dot{Q}_0$	t_{LA}	$\dot{Q}_0$	t_{LA}	$\dot{Q}_0$	t_{LA}
	t_{LE}[°C]	kW	°C	kW	°C	kW	°C	kW	°C	t_{LE}[°C]	kW	°C	t_{LE}[°C]	kW	°C	kW	°C	kW	°C
	- 15	58,6	2	75,3	7	96,9	15	112,6	21	- 15	125,0	20	- 15	125,7	20	161,6	31	202,9	47
	- 10	52,5	5	67,4	10	87,0	17	101,3	23	- 10	118,9	24	- 10	119,3	24	153,2	35	192,6	50
	- 5	46,5	9	59,6	13	77,2	19	90,2	25	- 5	112,8	28	- 5	112,9	28	145,1	38	182,4	63
LPHW	± 0	40,6	12	52,0	16	67,6	22	79,2	27	**1,1** ± 0	102,8	31	**PHW** ± 0	106,7	32	137,0	41	172,4	56
45/35	+ 5	34,8	16	44,4	19	58,1	24	68,4	29	**bar** + 5	101,0	36	**110/90** + 5	100,5	36	129,0	45	162,5	58
	+ 10	29,9	19	36,9	22	48,7	26	57,7	31	+ 10	95,1	39	+ 10	94,4	39	121,1	48	152,7	61
	+ 15	23,3	22	29,6	24	39,4	28	47,1	32	+ 15	89,3	43	+ 15	88,4	43	113,3	51	143,1	64
	+ 20	17,7	26	22,3	27	30,2	30	36,5	33	+ 20	83,7	47	+ 20	82,4	46	105,6	54	133,6	66
	- 15	64,6	3	83,1	9	106,4	17	123,1	25	- 15	134,3	23	- 15	137,2	24	176,4	35	220,3	52
	- 10	58,4	7	75,2	12	96,5	20	111,8	27	- 10	121,8	27	- 10	130,8	28	168,0	39	209,9	55
	- 5	52,4	10	67,4	15	86,6	22	100,6	29	- 5	122,0	31	- 5	124,4	31	159,6	42	199,7	58
LPHW	± 0	46,5	14	59,6	18	77,0	25	89,6	31	**1,5** ± 0	116,0	35	**PHW** ± 0	118,1	35	151,5	46	189,6	61
50/40	+ 5	40,6	17	52,0	21	67,4	27	78,8	32	**bar** + 5	110,0	39	**120/100** + 5	111,8	39	143,5	49	179,7	64
	+ 10	34,8	21	44,5	24	58,0	29	68,1	34	+ 10	104,2	42	+ 10	105,7	43	135,5	52	169,9	67
	+ 15	29,1	24	37,1	27	48,6	32	57,5	36	+ 15	98,4	46	+ 15	99,6	46	127,7	56	160,2	70
	+ 20	23,4	27	29,7	30	39,4	34	47,0	37	+ 20	92,7	50	+ 20	93,6	50	119,9	59	150,7	72
	- 15	66,2	4	84,7	9	110,7	19	130,2	27	- 15	143,3	25	- 15	140,3	25	180,0	36	226,5	54
	- 10	60,1	7	76,8	12	100,7	21	118,8	29	- 10	137,1	29	- 10	133,8	28	171,6	40	216,1	57
	- 5	54,1	11	69,0	15	90,9	24	107,6	31	- 5	131,0	33	- 5	127,4	32	163,2	43	205,9	60
LPHW	± 0	48,2	14	61,3	19	81,2	26	96,5	33	**2,0** ± 0	124,9	37	**PHW** ± 0	121,1	36	155,2	47	195,8	63
60/40	+ 5	42,3	18	53,7	22	71,6	29	85,6	35	**bar** + 5	118,9	41	**130/100** + 5	114,9	40	147,1	50	185,9	66
	+ 10	36,5	21	46,2	24	62,0	31	74,7	37	+ 10	113,0	45	+ 10	108,7	44	139,2	54	176,1	69
	+ 15	30,8	25	38,8	27	52,6	33	63,9	38	+ 15	107,2	49	+ 15	102,6	47	131,4	57	166,4	72
	+ 20	25,1	28	31,4	30	43,2	35	53,1	40	+ 20	101,4	53	+ 20	96,6	51	123,6	60	156,8	74
	- 15	78,4	7	100,6	14	129,9	25	151,3	34	- 15	156,8	29	- 15	143,4	25	183,8	37	232,7	56
	- 10	72,2	11	92,6	17	119,9	27	139,9	36	- 10	150,5	33	- 10	136,9	29	175,4	41	222,3	59
	- 5	66,2	14	84,7	20	110,0	30	128,7	38	- 5	144,3	37	- 5	130,5	33	167,1	45	212,1	62
LPHW	± 0	60,2	18	76,9	23	100,2	32	117,6	40	**3,0** ± 0	138,2	41	**PHW** ± 0	124,2	37	159,0	48	202,0	65
70/50	+ 5	54,2	21	69,2	26	90,5	35	106,6	42	**bar** + 5	132,1	45	**140/100** + 5	117,9	41	150,9	51	192,0	68
	+ 10	48,4	25	61,6	29	81,0	37	95,8	44	+ 10	126,2	49	+ 10	111,8	45	142,9	55	182,1	71
	+ 15	42,6	28	54,1	32	71,5	39	85,0	46	+ 15	120,2	53	+ 15	105,7	48	135,1	58	172,4	74
	+ 20	36,8	32	46,7	35	62,2	42	74,4	47	+ 20	114,5	57	+ 20	99,6	52	127,3	61	162,8	76
	- 15	90,4	11	116,2	18	148,7	30	171,8	41	- 15	175,1	34	- 15	151,8	28	194,7	40	243,7	59
	- 10	84,2	14	108,1	21	138,6	33	160,4	43	- 10	168,7	39	- 10	145,2	32	186,2	44	233,3	62
	- 5	78,1	18	100,2	25	128,6	36	149,1	45	- 5	162,5	43	- 5	138,8	36	177,9	48	223,0	66
LPHW	± 0	72,0	21	92,3	28	118,8	38	138,0	47	**5,0** ± 0	156,3	47	**PHW** ± 0	132,4	40	169,7	51	212,9	69
80/60	+ 5	66,0	25	84,5	31	109,1	41	127,0	49	**bar** + 5	146,4	50	**140/110** + 5	126,1	43	161,6	55	202,9	72
	+ 10	60,1	29	76,8	34	99,5	43	116,1	51	+ 10	144,1	55	+ 10	119,9	47	153,6	58	193,0	75
	+ 15	54,2	32	69,2	37	90,0	46	105,4	53	+ 15	138,1	59	+ 15	113,8	51	145,7	61	183,3	77
	+ 20	48,4	35	61,7	40	80,6	48	94,8	55	+ 20	132,3	62	+ 20	107,7	54	137,8	65	173,7	80
	- 15	102,3	14	131,6	23	167,1	36	191,8	47	- 15	198,3	41							
	- 10	96,0	18	123,4	26	156,9	39	180,3	49	- 10	191,9	45							
	- 5	89,8	21	115,3	29	146,9	42	169,0	52	- 5	185,5	49							
LPHW	± 0	83,7	25	107,4	32	137,0	44	157,8	54	**9,0** ± 0	179,2	54							
90/70	+ 5	77,6	29	99,5	36	127,2	47	146,8	56	**bar** + 5	173,0	58							
	+ 10	71,6	32	91,8	39	117,6	49	136,0	58	+ 10	166,9	62							
	+ 15	65,7	36	84,1	42	108,0	52	125,2	60	+ 15	160,7	66							
	+ 20	59,9	39	76,6	45	96,6	54	114,6	62	+ 20	154,8	70							
Motor output [kW] (1 x 230 V)		max. 0,58		max. 0,58		max. 0,58		max. 0,58			max. 0,58			max. 0,58		max. 0,58		max. 0,58	
Curr. Consumpt. [A] (1 x 230 V)		max. 2,7		max. 2,7		max. 2,7		max. 2,7			max. 2,7			max. 2,7		max. 2,7		max. 2,7	
Air throw, wall mounted [m]*		32		31		29		27			32			32		31		29	
Air throw, ceiling mount. [m]*		7,9		7,8		7,6		7,2			7,9			7,9		7,8		7,6	
Sound pressure level dB[A]**		56		56		56		56			56			56		56		56	
Water capacity [litres]		3,5		5,5		7,5		9,5											
Heat exchanger connections		R 1"		R 1½"		R 1½"		R 1½"			DN 65 - DN 32			R 1"		R 1½"		R 1½"	

* Bei $t_{LA} - t_{Raum} = 10K$

** Sound pressure level measured 5 m from intake, room with average absorption; enclosed space approx. 1500 m³.

Performance tables

for LPHW — **for saturated steam**

Type		1				2				3				4					D			
Speed [min⁻¹]		1350		1000		1350		1000		1350		1000		1350		1000			1350		1000	
Air vol. $\dot{V}_0$ [m³/h]		2100		1700		2000		1600		1800		1450		1700		1350			2100		1700	
		$\dot{Q}_0$	t_{LA}	$\dot{Q}_0$	t_{LA}	$\dot{Q}_0$	t_{LA}	$\dot{Q}_0$	t_{LA}	$\dot{Q}_0$	t_{LA}	$\dot{Q}_0$	t_{LA}	$\dot{Q}_0$	t_{LA}	$\dot{Q}_0$	t_{LA}		$\dot{Q}_0$	t_{LA}	$\dot{Q}_0$	t_{LA}
	t_{LE}[°C]	kW	°C	kW	°C	kW	°C	kW	°C	kW	°C	kW	°C	kW	°C	kW	°C	t_{LE}[°C]	kW	°C	kW	°C
	- 15	10,7	-2	9,5	0	15,1	5	13,2	7	17,9	11	15,5	13	22,1	20	18,7	22	- 15	26,3	18	23,2	21
	- 10	9,5	2	8,5	3	13,5	8	11,8	10	16,0	14	13,9	16	19,8	22	16,8	24	- 10	25,0	22	22,0	25
	- 5	8,4	6	7,4	7	11,9	11	10,4	13	14,1	17	12,3	18	17,6	23	14,9	25	- 5	22,4	30	19,7	33
LPHW	± 0	7,2	10	6,4	11	10,3	15	9,1	16	12,3	19	10,7	21	15,3	25	13,0	27	**1,1** ± 0	21,1	34	18,6	36
45/35	+ 5	6,1	13	5,5	14	8,8	18	7,7	19	10,5	22	9,2	23	13,1	27	11,1	29	**bar** + 5	19,9	38	17,5	40
	+ 10	5,0	17	4,5	18	7,3	21	6,4	22	8,8	24	7,6	25	10,9	29	9,3	30	+ 10	18,6	41	16,4	44
	+ 15	4,0	21	3,5	21	5,8	24	5,1	24	7,0	27	6,1	28	8,8	30	7,5	31	+ 15	18,6	41	16,4	44
	+ 20	2,9	24	2,6	25	4,3	27	3,8	27	5,3	29	4,6	30	6,6	32	5,7	33	+ 20	17,4	45	15,3	47
	- 15	11,9	0	10,5	1	16,7	7	14,6	9	19,7	14	17,1	16	24,4	23	20,5	25	- 15	28,2	21	24,9	24
	- 10	10,7	4	9,5	5	15,1	10	13,2	12	17,8	17	15,5	19	22,1	25	18,6	27	- 10	26,9	25	23,7	28
	- 5	9,5	8	8,5	9	13,5	14	11,8	15	16,0	19	13,9	21	19,8	27	16,7	29	- 5	25,6	29	22,5	32
LPHW	± 0	8,4	11	7,5	12	11,9	17	10,4	18	14,1	22	12,3	24	17,5	29	14,8	31	**1,5** ± 0	24,3	33	21,4	35
50/40	+ 5	7,3	15	6,5	16	10,4	20	9,1	21	12,3	25	10,7	26	15,3	31	12,9	32	**bar** + 5	23,0	36	20,3	39
	+ 10	6,2	19	5,5	19	8,8	23	7,7	24	10,5	27	9,2	28	13,1	32	11,1	34	+ 10	21,8	40	19,2	43
	+ 15	5,1	22	4,5	23	7,3	26	6,4	27	8,8	29	7,7	31	10,9	34	9,3	35	+ 15	20,5	44	18,1	47
	+ 20	4,0	26	3,6	26	5,8	29	5,1	30	7,0	32	6,2	33	8,8	36	7,5	37	+ 20	19,3	48	17,0	50
	- 15	11,7	0	10,4	1	16,8	7	14,7	9	20,1	15	17,5	17	25,0	24	21,2	27	- 15	30,1	23	26,5	26
	- 10	10,6	4	9,4	5	15,2	11	13,3	13	18,2	17	15,9	20	22,7	26	19,3	29	- 10	28,8	27	25,3	30
	- 5	9,4	7	8,4	9	13,6	14	12,0	16	16,4	20	14,3	22	20,4	28	17,4	30	- 5	27,5	31	24,2	24
LPHW	± 0	8,3	11	7,4	12	12,1	17	10,6	19	14,5	23	12,7	25	18,2	30	15,5	32	**2,0** ± 0	26,2	35	23,0	38
60/40	+ 5	7,2	15	6,4	16	10,5	20	9,3	22	12,7	25	11,1	27	15,9	32	13,6	34	**bar** + 5	24,9	39	21,9	42
	+ 10	6,1	18	5,5	19	9,0	23	7,9	24	10,9	28	9,6	29	13,7	33	11,7	35	+ 10	23,6	43	20,8	46
	+ 15	5,0	22	4,5	23	7,5	26	6,6	27	9,2	30	8,1	31	11,5	35	9,9	37	+ 15	22,4	47	19,7	49
	+ 20	4,0	26	3,6	26	6,0	29	5,3	30	7,4	32	6,5	34	9,4	37	8,1	38	+ 20	21,1	50	18,6	53
	- 15	14,1	3	12,6	5	20,1	12	17,6	14	23,8	20	20,7	23	29,5	31	25,0	34	- 15	32,9	27	29,0	30
	- 10	13,0	7	11,5	8	18,5	15	16,2	17	21,9	23	19,1	26	27,2	33	23,0	36	- 10	31,6	31	27,8	34
	- 5	11,8	10	10,5	12	16,9	18	14,8	20	20,1	26	17,5	28	24,9	35	21,1	38	- 5	30,2	35	26,6	38
LPHW	± 0	10,7	14	9,5	16	15,3	21	13,4	23	18,2	28	15,9	31	22,6	37	19,2	40	**3,0** ± 0	28,9	39	25,5	42
70/50	+ 5	9,5	18	8,5	19	13,7	25	12,0	26	16,4	31	14,3	33	20,4	39	17,3	42	**bar** + 5	27,6	43	24,3	46
	+ 10	8,4	22	7,5	23	12,2	28	10,7	29	14,6	34	12,7	36	18,2	41	15,5	43	+ 10	26,3	47	23,2	50
	+ 15	7,3	25	6,6	26	10,7	31	9,4	32	12,8	36	11,2	38	16,0	43	13,6	45	+ 15	25,1	50	22,1	53
	+ 20	6,3	29	5,6	30	9,1	34	8,0	35	11,1	38	9,7	40	13,8	44	11,8	46	+ 20	23,8	54	21,0	57
	- 15	16,6	6	14,7	8	23,3	16	20,4	19	27,5	26	23,8	29	33,9	38	28,6	41	- 15	36,7	31	32,3	35
	- 10	15,4	10	13,6	12	21,7	19	18,9	22	25,6	28	22,2	31	31,6	40	26,6	43	- 10	35,3	36	31,1	40
	- 5	14,2	14	12,6	15	20,1	23	17,5	25	23,7	31	20,6	34	29,3	42	24,7	45	- 5	34,0	40	29,9	44
LPHW	± 0	13,0	17	11,6	19	18,5	26	16,1	28	21,8	34	19,0	37	27,0	45	22,8	47	**5,0** ± 0	32,7	44	28,8	48
80/60	+ 5	11,9	21	10,6	23	16,9	29	14,8	31	20,0	37	17,4	39	24,7	47	20,9	49	**bar** + 5	31,4	48	27,6	51
	+ 10	10,7	25	9,6	26	15,3	32	13,4	34	18,2	39	15,8	42	22,5	48	19,1	51	+ 10	30,1	52	26,5	55
	+ 15	9,6	29	8,6	30	13,8	35	12,1	37	16,4	42	14,3	44	20,3	50	17,2	53	+ 15	28,8	56	25,3	59
	+ 20	8,5	32	7,6	33	12,2	38	10,7	40	14,6	44	12,7	46	18,1	52	15,4	54	+ 20	27,5	59	24,2	63
	- 15	18,9	9	16,8	11	26,5	20	23,1	23	31,1	31	26,9	34	38,1	44	32,1	48	- 15	41,5	37	36,5	42
	- 10	17,7	13	15,7	15	24,9	24	21,8	27	29,2	34	25,2	37	35,9	47	30,1	50	- 10	40,1	42	35,3	46
	- 5	16,5	17	14,7	19	23,2	27	20,2	30	27,2	37	23,6	40	33,5	49	38,2	53	- 5	37,4	50	32,9	54
LPHW	± 0	15,3	20	13,6	22	21,6	30	18,8	33	25,4	40	22,0	43	31,2	51	26,3	55	**9,0** ± 0	36,1	54	31,8	58
90/70	+ 5	14,2	24	12,6	26	20,0	34	17,4	36	23,5	42	20,4	45	28,9	54	24,4	57	**bar** + 5	34,8	58	30,6	62
	+ 10	13,0	28	11,6	30	18,4	37	16,1	39	21,7	45	18,8	48	26,7	56	22,5	59	+ 10	34,8	58	30,6	62
	+ 15	11,9	32	10,6	33	16,8	40	14,7	42	19,,9	48	17,3	50	24,5	58	20,7	60	+ 15	33,5	62	29,5	66
	+ 20	10,8	35	9,6	37	15,3	43	13,4	45	18,1	50	15,7	53	22,3	60	18,9	63	+ 20	32,2	66	28,3	70
Motor output [kW] (3 x 400 V)		max. 0,17		max. 0,10		max. 0,17		max. 0,10		max. 0,17		max. 0,10		max. 0,17		max. 0,10			max. 0,17		max. 0,10	
Curr. Consumpt. [A] (3 x 400 V)		max. 0,32		max. 0,16		max. 0,32		max. 0,16		max. 0,32		max. 0,16		max. 0,32		max. 0,16			max. 0,32		max. 0,16	
Air throw, wall mounted [m]*		0,32		0,16		14,5		12		13		10,5		12,5		10			15,5		12,5	
Air throw, ceiling mount. [m]*		5,7		4,7		5,4		4,5		5,0		4,2		4,8		4,0			5,7		4,7	
Sound pressure level dB[A]**		56		50		56		50		56		50		56		50			56		50	
Water capacity [litres]		0,7				1,0				1,1				1,8								
Heat exchanger connections		R ¾"				R 1"				R 1"				R 1"					DN 40 - DN 20			

* Bei $t_{LA} - t_{Raum}$ = 10K

** Sound pressure level measured 5 m from intake, room with average absorption; enclosed space approx. 1500 m³.

for LPHW

Type		1				2				3			
Speed [min⁻¹]		1350		1000		1350		1000		1350		1000	
Air vol. $\dot{V}_0$ [m³/h]		2100		1700		2000		1600		1800		1450	
		$\dot{Q}_0$	t_{LA}	$\dot{Q}_0$	t_{LA}	$\dot{Q}_0$	t_{LA}	$\dot{Q}_0$	t_{LA}	$\dot{Q}_0$	t_{LA}	$\dot{Q}_0$	t_{LA}
	t_{LE}[°C]	kW	°C	kW	°C	kW	°C	kW	°C	kW	°C	kW	°C
PHW 110/90	- 15	23,6	15	20,9	18	32,7	28	28,5	32	38,1	41	32,9	45
	- 10	22,3	19	19,8	21	31,0	32	27,0	36	36,1	44	31,2	48
	- 5	21,1	23	18,7	25	29,4	35	25,5	39	34,2	47	29,5	51
	± 0	19,9	27	17,6	29	27,7	39	24,1	42	32,3	50	27,9	54
	+ 5	18,7	30	16,6	33	26,1	42	22,7	46	30,4	53	26,2	57
	+ 10	17,5	34	15,6	37	24,5	46	21,3	49	28,5	56	24,6	59
	+ 15	16,4	38	14,5	40	22,9	49	19,9	52	26,7	59	23,1	62
	+ 20	15,2	42	13,5	44	21,3	52	18,5	55	24,9	62	21,5	65
PHW 120/100	- 15	25,9	18	22,9	21	35,8	32	31,1	37	41,5	46	35,7	50
	- 10	24,6	22	21,8	25	34,1	36	29,6	40	39,5	49	34,1	53
	- 5	23,4	26	20,7	29	32,4	40	28,1	43	37,5	52	32,4	57
	± 0	22,2	30	19,6	32	30,7	43	26,7	47	35,6	56	30,7	59
	+ 5	21,0	34	18,6	36	29,1	47	25,3	50	33,7	59	29,1	62
	+ 10	19,8	37	17,5	40	27,4	50	23,9	53	31,9	61	27,5	65
	+ 15	18,6	41	16,5	44	25,8	53	22,5	57	30,0	64	25,9	68
	+ 20	17,5	45	15,5	47	24,2	56	21,1	60	28,2	67	24,3	71
PHW 130/100	- 15	26,1	18	23,2	21	36,4	33	31,7	37	42,4	47	36,6	52
	- 10	24,9	22	22,1	25	34,7	37	30,2	41	40,4	51	34,9	55
	- 5	23,7	26	21,0	29	33,0	40	28,7	44	38,5	54	33,2	58
	± 0	22,4	30	19,9	33	31,3	44	27,3	48	36,5	57	31,6	61
	+ 5	21,2	34	18,8	37	29,7	47	25,8	51	34,6	60	29,9	64
	+ 10	20,1	38	17,8	40	28,0	51	24,4	54	32,8	63	28,3	67
	+ 15	18,9	42	16,8	44	28,0	51	24,4	54	32,8	63	28,3	67
	+ 20	17,7	45	15,7	48	24,9	57	21,7	61	29,1	69	25,2	72
PHW 140/100	- 15	26,4	18	23,4	22	37,0	34	32,2	38	43,3	49	37,4	53
	- 10	25,2	22	22,3	26	35,3	38	30,8	42	41,3	52	35,7	57
	- 5	24,0	26	21,3	29	33,6	41	29,3	45	39,4	55	34,1	60
	± 0	22,7	30	20,2	33	31,9	45	27,9	49	37,4	58	32,4	63
	+ 5	21,6	34	19,1	37	30,3	48	26,4	52	35,5	61	30,8	66
	+ 10	20,4	38	18,1	41	28,7	52	25,0	55	33,7	64	29,2	68
	+ 15	19,2	42	17,1	45	27,1	55	23,6	59	31,8	67	27,6	71
	+ 20	18,0	46	16,0	48	25,5	58	22,2	62	30,0	70	26,0	74
PHW 140/110	- 15	28,4	21	25,2	24	39,4	37	34,3	42	45,7	52	39,5	57
	- 10	27,2	25	24,1	28	37,7	41	32,8	45	43,8	56	37,7	60
	- 5	25,9	29	23,0	32	36,0	45	31,3	49	41,8	59	36,1	64
	± 0	24,7	33	21,9	36	34,3	48	29,8	52	39,9	62	34,4	67
	+ 5	23,5	37	20,8	40	32,7	52	28,4	56	38,0	65	32,8	70
	+ 10	22,3	41	19,8	44	31,0	55	27,0	59	36,1	68	31,2	72
	+ 15	21,1	45	18,7	48	29,4	58	25,6	62	34,2	71	29,6	75
	+ 20	19,9	49	17,7	51	27,8	62	24,2	66	32,4	74	28,0	78

Motor output [kW] (3 x 400 V)	max. 0,17	max. 0,10	max. 0,17	max. 0,10	max. 0,17	max. 0,10
Curr. Consumpt. [A] (3 x 400 V)	max. 0,32	max. 0,16	max. 0,32	max. 0,16	max. 0,32	max. 0,16
Air throw, wall mounted [m]*	15,5	12,5	14,5	12	13	10,5
Air throw, ceiling mount. [m]*	5,7	4,7	5,4	4,5	5,0	4,2
Sound pressure level dB[A]**	56	50	56	50	56	50
Water capacity [litres]	0,7		1,0		1,1	
Heat exchanger connections	R ¾"		R 1"		R 1"	

Performance tables

for LPHW — **for saturated steam**

Type		1				2				3				4					D			
Speed [min⁻¹]		1350		1000		1350		1000		1350		1000		1350		1000			1350		1000	
Air vol. $\dot{V}_0$ [m³/h]		3500		2500		3400		2400		3100		2200		2800		2000			3500		2500	
		$\dot{Q}_0$	t_{LA}	$\dot{Q}_0$	t_{LA}	$\dot{Q}_0$	t_{LA}	$\dot{Q}_0$	t_{LA}	$\dot{Q}_0$	t_{LA}	$\dot{Q}_0$	t_{LA}	$\dot{Q}_0$	t_{LA}	$\dot{Q}_0$	t_{LA}		$\dot{Q}_0$	t_{LA}	$\dot{Q}_0$	t_{LA}
	t_{LE}[°C]	kW	°C	kW	°C	kW	°C	kW	°C	kW	°C	kW	°C	kW	°C	kW	°C	t_{LE}[°C]	kW	°C	kW	°C
	- 15	20,1	0	16,5	3	24,0	4	19,5	7	31,9	12	25,3	16	36,3	19	28,4	23	- 15	43,8	18	35,7	23
	- 10	17,9	4	14,8	6	21,4	7	17,4	10	28,6	15	22,7	18	32,6	21	25,5	24	- 10	41,6	22	34,0	27
	- 5	15,8	7	13,1	9	18,9	10	15,4	13	25,3	17	20,2	20	28,9	23	22,7	26	- 5	39,4	26	32,2	31
LPHW	± 0	13,7	11	11,3	13	16,4	14	13,4	16	22,1	20	17,6	22	25,3	25	19,9	28	**1,1** ± 0	37,3	30	30,5	34
45/35	+ 5	11,7	15	9,7	16	14,0	17	11,4	19	18,9	22	15,1	25	21,7	27	17,1	29	**bar** + 5	35,2	34	28,8	38
	+ 10	9,6	18	8,0	19	11,6	20	9,5	21	15,8	25	12,7	27	18,2	29	14,4	312	+ 10	33,2	38	27,1	42
	+ 15	7,7	21	6,4	23	9,2	23	7,5	24	12,7	27	10,2	29	14,7	31	11,6	32	+ 15	31,1	41	25,4	45
	+ 20	5,7	25	4,8	26	6,9	26	5,7	27	9,7	29	7,8	31	11,2	32	8,9	33	+ 20	29,1	45	23,8	49
	- 15	22,2	2	18,3	4	26,6	6	21,5	9	35,1	15	27,9	19	39,9	23	31,1	26	- 15	47,0	21	38,4	26
	- 10	20,1	5	16,5	8	24,0	9	19,4	12	31,7	18	25,2	21	36,1	25	28,2	28	- 10	44,8	25	36,6	30
	- 5	17,9	9	14,8	11	21,4	12	17,4	15	28,5	20	22,7	23	32,5	27	25,4	30	- 5	42,6	29	34,8	33
LPHW	± 0	15,8	13	13,1	15	18,9	16	15,4	18	25,2	23	20,1	26	28,8	29	22,6	32	**1,5** ± 0	40,6	33	33,1	37
50/40	+ 5	13,8	16	11,4	18	16,5	19	13,4	21	22,1	25	17,6	28	25,2	31	19,8	33	**bar** + 5	38,4	36	31,4	41
	+ 10	11,7	20	9,7	21	14,0	22	11,4	24	18,9	28	15,1	30	21,7	33	17,0	35	+ 10	36,3	40	29,7	45
	+ 15	9,7	23	8,0	25	11,6	25	9,5	27	15,8	30	12,7	32	18,2	34	14,3	36	+ 15	34,3	44	28,0	48
	+ 20	7,7	27	6,4	28	9,3	28	7,6	30	12,8	32	10,2	34	14,7	36	11,6	38	+ 20	32,2	48	26,3	52
	- 15	22,3	2	18,4	5	26,7	6	21,8	9	36,1	16	28,9	20	41,5	24	32,6	28	- 15	50,1	23	40,9	28
	- 10	20,1	6	16,7	8	24,2	9	19,7	12	32,8	19	26,2	22	37,7	26	29,7	30	- 10	47,9	27	39,1	32
	- 5	18,0	9	14,9	11	21,6	13	17,7	15	29,5	21	23,7	25	34,0	28	26,8	32	- 5	45,8	31	37,4	36
LPHW	± 0	15,9	13	13,2	15	19,2	16	15,7	18	26,3	24	21,1	27	30,4	30	24,0	34	**2,0** ± 0	43,6	35	35,6	40
60/40	+ 5	13,9	16	11,6	18	16,7	19	13,7	21	23,1	26	18,6	29	26,7	32	21,2	35	**bar** + 5	41,5	39	33,9	44
	+ 10	11,9	20	9,9	22	14,3	22	11,8	24	20,0	29	16,1	31	23,2	34	18,4	37	+ 10	39,4	43	32,2	47
	+ 15	9,9	23	8,3	25	11,9	25	9,8	27	16,8	31	13,6	33	19,6	36	15,6	38	+ 15	37,3	47	30,5	51
	+ 20	7,9	27	6,6	28	9,6	28	7,9	30	13,7	33	11,1	35	16,1	37	12,9	39	+ 20	35,3	50	28,8	55
	- 15	26,7	5	22,0	8	31,9	10	25,9	14	42,6	21	33,9	26	48,6	31	38,0	35	- 15	54,8	27	44,7	23
	- 10	24,5	9	20,3	12	29,4	13	23,9	17	39,3	24	31,3	28	44,9	33	35,1	37	- 10	52,6	31	42,9	36
	- 5	22,4	13	18,5	15	26,8	17	21,8	20	36,0	27	28,7	31	41,2	35	32,3	39	- 5	50,4	35	41,1	40
LPHW	± 0	20,3	16	16,8	19	24,3	20	19,8	23	32,7	30	26,1	33	37,5	38	29,4	41	**3,0** ± 0	48,2	39	39,4	44
70/50	+ 5	18,2	20	15,1	22	21,8	23	17,8	26	29,5	32	23,6	36	33,9	40	26,6	43	**bar** + 5	46,1	43	37,6	48
	+ 10	16,1	23	13,4	26	19,3	27	15,8	29	26,3	35	21,1	38	30,3	41	23,9	45	+ 10	44,0	47	35,9	52
	+ 15	14,1	27	11,7	29	16,9	30	13,8	32	23,2	37	18,6	40	26,7	43	21,1	46	+ 15	41,9	50	34,2	55
	+ 20	12,1	30	10,1	32	14,5	33	11,9	35	20,1	39	16,2	42	23,2	45	18,4	48	+ 20	39,8	54	32,5	59
	- 15	31,1	9	25,6	12	37,1	14	30,1	18	49,0	27	38,9	32	55,6	38	43,3	42	- 15	61,2	31	49,9	38
	- 10	28,9	12	23,8	16	34,5	17	27,9	21	45,6	30	36,2	35	51,8	40	40,4	45	- 10	58,9	36	48,1	42
	- 5	26,7	16	22,0	19	31,9	21	25,9	25	42,3	33	33,6	37	48,1	42	37,5	47	- 5	56,7	40	46,2	46
LPHW	± 0	24,5	20	20,2	23	29,3	24	23,8	28	39,0	35	31,0	40	44,4	44	34,7	49	**5,0** ± 0	54,5	44	44,5	50
80/60	+ 5	22,4	23	18,5	26	26,8	28	21,8	31	35,8	38	28,5	42	40,8	47	31,9	51	**bar** + 5	52,3	48	42,7	54
	+ 10	20,3	27	16,8	30	24,3	31	19,8	34	32,6	41	26,0	44	37,2	49	29,1	52	+ 10	50,2	52	40,9	58
	+ 15	18,3	30	15,1	33	21,9	34	17,8	37	29,4	43	23,5	47	33,6	51	26,4	54	+ 15	48,1	56	39,2	61
	+ 20	16,2	34	13,4	36	19,4	37	15,9	40	26,3	46	21,0	49	30,1	52	23,7	56	+ 20	46,0	60	37,5	65
	- 15	35,4	12	29,1	16	42,1	18	34,1	23	55,2	32	43,7	38	62,4	44	48,5	49	- 15	69,3	38	56,4	45
	- 10	33,1	16	27,3	19	39,5	21	32,0	26	51,8	35	41,1	40	58,6	47	45,5	52	- 10	67,0	42	54,6	49
	- 5	30,9	19	25,5	23	36,9	25	29,9	29	48,5	38	38,4	43	54,8	49	42,7	54	- 5	64,7	46	52,7	53
LPHW	± 0	28,8	23	23,7	27	34,3	28	27,8	32	45,2	41	35,8	46	51,1	51	39,8	56	**9,0** ± 0	62,5	50	50,9	57
90/70	+ 5	26,6	27	21,9	30	31,8	32	25,7	36	41,9	44	33,3	48	47,5	53	37,0	58	**bar** + 5	60,3	54	49,1	61
	+ 10	24,5	30	20,2	33	29,2	35	23,7	39	38,7	46	30,7	51	43,9	56	34,2	60	+ 10	58,1	58	47,3	65
	+ 15	22,4	34	18,5	37	26,8	38	21,7	42	35,5	49	28,2	53	40,3	58	31,5	62	+ 15	56,0	62	45,6	69
	+ 20	20,3	37	16,8	40	24,3	42	19,7	45	32,4	51	25,8	55	36,8	60	28,8	63	+ 20	53,8	66	43,9	73
Motor output [kW] (3 x 400 V)		max. 0,28		max. 0,22		max. 0,28		max. 0,22		max. 0,28		max. 0,22		max. 0,28		max. 0,22			max. 0,28		max. 0,22	
Curr. Consumpt. [A] (3 x 400 V)		max. 0,6		max. 0,3		max. 0,6		max. 0,3		max. 0,6		max. 0,3		max. 0,6		max. 0,3			max. 0,6		max. 0,3	
Air throw, wall mounted [m]*		23		16		22,5		15		20		13,5		18		12			23		16	
Air throw, ceiling mount. [m]*		5,6		4,1		5,5		3,9		5,0		3,6		4,5		3,3			5,6		4,1	
Sound pressure level dB[A]**		60		54		60		54		60		54		60		54			60		54	
Water capacity [litres]		1,0				1,5				2,0				2,5								
Heat exchanger connections		R ¾"				R 1"				R 1"				R 1"					DN 40 - DN 20			

* Bei $t_{LA} - t_{Raum}$ = 10K

** Sound pressure level measured 5 m from intake, room with average absorption; enclosed space approx. 1500 m³.

for LPHW

Type		1				2				3			
Speed [min⁻¹]		1350		1000		1350		1000		1350		1000	
Air vol. $\dot{V}_0$ [m³/h]		3500		2500		3400		2400		3100		2200	
		$\dot{Q}_0$	t_{LA}	$\dot{Q}_0$	t_{LA}	$\dot{Q}_0$	t_{LA}	$\dot{Q}_0$	t_{LA}	$\dot{Q}_0$	t_{LA}	$\dot{Q}_0$	t_{LA}
	t_{LE}[°C]	kW	°C	kW	°C	kW	°C	kW	°C	kW	°C	kW	°C
PHW 110/90	- 15	43,8	18	35,9	23	52,1	26	42,0	31	67,4	43	53,1	49
	- 10	41,5	22	34,1	27	49,4	29	39,8	35	63,9	46	50,4	52
	- 5	39,3	26	32,2	31	46,7	33	37,7	38	60,5	49	47,7	55
	± 0	37,1	30	30,4	34	44,1	36	35,6	42	57,2	52	45,1	58
	+ 5	4,9	33	28,6	38	41,5	40	33,5	45	53,8	55	42,5	60
	+ 10	32,7	37	26,9	41	38,9	43	31,4	48	50,6	57	40,0	63
	+ 15	30,6	41	25,1	45	36,4	47	29,4	51	47,4	60	37,4	65
	+ 20	28,5	44	23,4	48	33,9	50	27,4	54	44,2	63	34,9	68
PHW 120/100	- 15	48,0	21	39,3	27	56,9	29	45,8	36	73,3	48	57,7	54
	- 10	45,7	25	37,4	30	54,2	33	43,7	39	69,8	51	54,9	58
	- 5	43,4	29	35,6	34	51,5	37	41,5	43	66,4	54	52,3	60
	± 0	41,2	33	33,8	38	48,9	40	39,4	46	63,0	57	49,6	63
	+ 5	39,0	37	31,9	42	46,2	44	37,3	49	59,7	60	47,0	66
	+ 10	36,8	41	30,2	45	43,7	47	35,2	53	56,4	63	44,5	69
	+ 15	34,6	44	28,4	49	41,1	51	33,1	56	53,2	66	41,9	71
	+ 20	32,5	48	26,7	52	38,6	54	31,1	59	50,0	68	39,4	74
PHW 130/100	- 15	48,7	22	40,0	27	57,9	30	46,7	37	75,1	49	59,2	56
	- 10	46,4	26	38,1	31	55,2	34	44,5	40	71,6	52	56,5	59
	- 5	44,1	30	36,2	35	52,5	38	42,4	44	68,2	56	53,8	62
	± 0	41,9	34	34,4	39	49,8	41	40,2	47	64,8	59	51,2	65
	+ 5	39,7	37	32,6	42	47,2	45	38,1	50	61,5	62	48,6	68
	+ 10	37,5	41	30,8	46	44,6	48	36,1	54	58,2	65	46,0	71
	+ 15	35,3	45	29,1	49	42,1	52	34,0	57	55,0	67	43,5	73
	+ 20	33,2	49	27,3	53	39,5	55	32,0	60	51,8	70	41,0	76
PHW 140/100	- 15	49,4	22	40,6	28	58,9	31	47,6	38	76,9	51	60,8	58
	- 10	47,1	26	38,8	32	56,1	35	45,4	41	73,5	54	58,1	61
	- 5	44,9	30	36,9	36	53,5	38	43,2	45	70,0	57	55,4	64
	± 0	42,6	34	35,1	39	50,8	42	41,1	48	66,7	60	52,8	67
	+ 5	40,4	38	33,3	43	48,2	45	39,0	51	63,3	63	50,2	70
	+ 10	38,3	42	31,5	47	45,6	49	36,9	55	60,0	66	47,6	73
	+ 15	36,1	46	29,8	50	43,0	52	34,9	58	56,8	69	45,0	76
	+ 20	34,0	49	28,0	54	40,5	56	32,9	61	53,6	72	42,5	78
PHW 140/110	- 15	52,8	25	43,3	31	62,7	34	50,5	41	81,0	54	63,7	62
	- 10	50,5	29	41,4	35	60,0	38	48,3	44	77,5	58	61,0	65
	- 5	48,2	33	39,6	39	57,3	41	46,2	48	74,0	61	58,3	68
	± 0	46,0	37	37,7	42	54,6	45	44,0	51	70,6	64	55,7	71
	+ 5	43,7	41	35,9	46	52,0	49	41,9	55	67,3	67	53,1	74
	+ 10	41,5	45	34,1	50	49,4	52	39,8	58	64,0	70	50,5	77
	+ 15	39,4	48	32,3	53	46,8	56	37,8	62	60,7	73	47,9	79
	+ 20	37,2	52	30,6	57	44,2	59	35,7	65	57,5	76	45,4	82

Motor output [kW] (3 x 400 V)	max. 0,28	max. 0,22	max. 0,28	max. 0,22	max. 0,28	max. 0,22
Curr. Consumpt. [A] (3 x 400 V)	max. 0,6	max. 0,3	max. 0,6	max. 0,3	max. 0,6	max. 0,3
Air throw, wall mounted [m]*	23	16	22,5	15	20	13,5
Air throw, ceiling mount. [m]*	5,6	4,1	5,5	3,9	5,0	3,6
Sound pressure level dB[A]**	60	54	60	54	60	54
Water capacity [litres]	1,0		1,5		2,0	
Heat exchanger connections	R ¾"		R 1"		R 1"	

Performance tables

for LPHW — **for saturated steam**

Type		1				2				3				4					D			
Speed [min⁻¹]		900		700		900		700		900		700		900		700			900		700	
Air vol. $\dot{V}_0$ [m³/h]		5300		400		5200		3900		4600		3500		4400		3400			5300		4000	
		$\dot{Q}_0$	t_{LA}	$\dot{Q}_0$	t_{LA}	$\dot{Q}_0$	t_{LA}	$\dot{Q}_0$	t_{LA}	$\dot{Q}_0$	t_{LA}	$\dot{Q}_0$	t_{LA}	$\dot{Q}_0$	t_{LA}	$\dot{Q}_0$	t_{LA}		$\dot{Q}_0$	t_{LA}	$\dot{Q}_0$	t_{LA}
	t_{LE}[°C]	kW	°C	kW	°C	kW	°C	kW	°C	kW	°C	kW	°C	kW	°C	kW	°C	t_{LE}[°C]	kW	°C	kW	°C
	- 15	33,6	2	28,6	4	43,6	7	36,5	10	50,7	14	42,1	17	61,3	22	50,5	24	- 15	72,4	21	61,0	25
	- 10	30,2	5	25,6	7	39,1	10	32,7	13	45,5	17	37,8	19	55,1	24	45,4	26	- 10	68,8	25	58,0	29
	- 5	26,7	9	22,7	11	34,6	13	29,0	15	40,4	19	33,6	21	49,0	26	40,4	28	- 5	65,3	29	55,0	33
LPHW	± 0	23,3	12	19,8	14	30,2	16	25,3	18	35,3	22	29,4	24	42,9	27	35,5	29	**1,1** ± 0	61,8	33	52,1	37
45/35	+ 5	20,0	16	17,0	17	25,8	19	21,7	21	30,3	24	25,3	26	37,0	29	30,6	31	**bar** + 5	58,4	37	49,2	40
	+ 10	16,7	19	14,2	20	21,5	22	18,1	23	25,4	26	21,2	28	31,1	31	25,8	32	+ 10	55,0	40	46,4	44
	+ 15	13,4	22	11,5	23	17,3	25	14,6	26	20,5	28	17,2	30	25,3	32	21,0	33	+ 15	51,7	44	43,5	47
	+ 20	10,2	26	8,7	27	13,1	28	11,1	29	15,7	30	13,2	31	19,5	33	16,3	34	+ 20	48,3	47	40,7	51
	- 15	37,1	4	31,5	6	48,1	10	40,2	12	55,7	17	46,2	20	67,1	25	55,2	28	- 15	77,7	24	65,5	28
	- 10	33,6	7	28,5	9	43,5	13	36,4	15	50,5	20	41,9	22	60,9	27	50,1	30	- 10	74,2	28	62,5	32
	- 5	30,1	11	25,6	13	39,0	16	32,6	18	45,3	22	37,6	25	54,8	29	45,1	32	- 5	70,6	32	59,5	36
LPHW	± 0	26,7	14	22,7	16	34,6	19	28,9	21	40,2	25	33,5	27	48,7	31	40,1	33	**1,5** ± 0	67,1	36	56,5	40
50/40	+ 5	23,3	18	19,8	19	30,2	22	25,3	24	35,2	27	29,3	29	42,8	33	35,3	35	**bar** + 5	63,7	39	53,6	43
	+ 10	20,0	21	17,0	22	25,9	24	21,7	26	30,3	29	25,2	31	36,9	34	30,5	36	+ 10	60,2	43	50,8	47
	+ 15	16,7	24	14,2	26	21,6	27	18,1	29	25,4	31	21,2	33	31,0	36	25,7	37	+ 15	56,9	47	47,9	50
	+ 20	13,5	28	11,5	29	17,4	30	14,6	31	20,6	33	17,2	35	25,3	37	21,0	39	+ 20	53,5	50	45,1	54
	- 15	38,0	4	32,4	6	49,3	10	41,3	13	57,8	18	48,2	22	70,5	27	58,3	30	- 15	82,9	27	69,9	31
	- 10	34,6	8	29,4	10	44,7	13	37,5	16	52,6	21	43,9	24	64,2	29	53,2	32	- 10	79,3	31	66,8	35
	- 5	31,1	11	26,5	13	40,2	16	33,8	19	47,4	23	39,6	26	58,1	31	48,1	34	- 5	75,8	34	63,8	39
LPHW	± 0	27,7	15	23,6	17	35,8	19	30,1	22	42,3	26	35,4	28	52,0	33	43,2	36	**2,0** ± 0	72,2	38	60,8	43
60/40	+ 5	24,3	18	20,8	20	31,4	22	26,5	24	37,3	28	31,2	31	46,0	35	38,2	37	**bar** + 5	68,8	42	57,9	46
	+ 10	21,0	22	18,0	23	27,1	25	22,8	27	32,3	30	27,1	33	40,0	36	33,3	39	+ 10	65,3	46	55,0	50
	+ 15	17,7	25	15,2	26	22,8	28	19,3	30	27,4	33	23,0	34	34,1	38	28,5	40	+ 15	61,9	50	52,2	54
	+ 20	14,4	28	12,4	29	18,5	31	15,7	32	22,5	35	19,0	36	28,1	39	23,6	41	+ 20	58,6	53	49,4	57
	- 15	45,0	8	38,3	10	58,3	15	48,8	18	67,9	24	56,5	28	82,2	35	67,7	38	- 15	90,7	30	76,3	36
	- 10	41,5	11	35,3	14	53,7	18	45,0	21	62,6	27	52,1	30	75,9	37	62,6	40	- 10	87,0	34	73,3	40
	- 5	38,0	15	32,3	17	49,2	21	41,2	24	57,5	29	47,8	33	69,7	39	57,6	42	- 5	83,4	38	70,2	43
LPHW	± 0	34,6	18	29,4	21	44,7	24	37,5	27	52,3	32	43,6	35	63,7	41	52,6	43	**3,0** ± 0	79,9	42	67,3	47
70/50	+ 5	31,2	22	26,5	24	40,3	27	33,8	30	47,3	34	39,4	37	57,6	42	47,7	45	**bar** + 5	76,4	46	64,3	51
	+ 10	27,8	25	23,7	27	35,9	30	30,2	32	42,3	37	35,3	39	51,7	44	42,8	47	+ 10	72,9	50	61,4	55
	+ 15	24,5	29	20,9	30	31,6	33	26,6	35	37,3	39	31,2	41	45,8	46	38,0	48	+ 15	69,5	54	58,5	58
	+ 20	21,2	32	18,1	34	27,3	36	23,0	38	32,4	41	27,2	43	39,9	47	33,2	49	+ 20	66,1	58	55,7	62
	- 15	51,9	11	44,1	14	67,3	19	56,2	23	77,8	30	64,5	34	93,5	41	76,9	45	- 15	101,3	36	85,2	42
	- 10	48,4	15	41,0	18	62,6	23	52,3	26	72,5	33	60,2	36	87,2	44	71,7	47	- 10	97,6	40	82,1	46
	- 5	44,8	18	38,1	21	58,0	26	48,5	29	67,3	35	55,9	39	81,1	46	66,7	49	- 5	93,9	44	79,0	49
LPHW	± 0	41,4	22	35,1	25	53,5	29	44,7	32	62,1	38	51,6	41	74,9	48	61,7	51	**5,0** ± 0	90,3	48	76,0	53
80/60	+ 5	37,9	25	32,2	28	49,0	32	41,0	35	57,0	40	47,4	44	68,9	50	56,8	53	**bar** + 5	86,8	52	73,0	57
	+ 10	34,5	29	29,3	31	44,6	35	37,4	38	52,0	43	43,3	46	63,0	52	52,0	54	+ 10	83,3	56	70,0	61
	+ 15	31,2	32	26,5	35	40,2	38	33,7	41	47,0	45	39,2	48	57,1	53	47,1	56	+ 15	79,8	60	67,1	65
	+ 20	27,8	36	23,7	38	35,9	41	30,1	43	42,1	48	35,1	50	51,3	55	42,4	58	+ 20	76,4	63	64,3	68
	- 15	58,8	14	49,8	18	76,0	24	63,4	28	87,5	35	72,4	40	104,5	48	85,7	52	- 15	114,6	42	96,3	49
	- 10	55,1	18	46,7	22	71,3	27	59,5	31	82,2	38	68,0	43	98,2	50	80,6	54	- 10	110,9	47	93,2	53
	- 5	51,6	22	43,7	25	66,7	30	55,6	34	76,9	41	63,7	45	92,0	53	75,5	56	- 5	107,2	51	90,1	57
LPHW	± 0	48,1	25	40,8	29	62,1	34	51,9	37	71,7	44	59,4	48	86,1	55	70,6	58	**9,0** ± 0	103,5	55	87,0	61
90/70	+ 5	44,6	29	37,8	32	57,6	37	48,1	40	66,6	46	55,2	50	79,9	57	65,6	60	**bar** + 5	99,9	59	84,0	65
	+ 10	41,2	33	34,9	35	53,2	40	44,4	43	61,5	49	51,0	52	73,9	59	60,8	62	+ 10	96,4	63	81,0	69
	+ 15	37,8	36	32,1	39	48,8	43	40,8	46	56,5	51	46,9	55	68,0	61	56,0	64	+ 15	92,9	67	78,0	73
	+ 20	34,4	40	29,2	42	44,4	46	37,2	49	51,6	54	42,9	57	62,2	63	51,2	65	+ 20	89,4	71	75,1	77
Motor output [kW] (3 x 400 V)		max. 0,34		max. 0,25		max. 0,34		max. 0,25		max. 0,34		max. 0,25		max. 0,34		max. 0,25			max. 0,34		max. 0,25	
Curr. Consumpt. [A] (3 x 400 V)		max. 0,79		max. 0,35		max. 0,79		max. 0,35		max. 0,79		max. 0,35		max. 0,79		max. 0,35			max. 0,79		max. 0,35	
Air throw, wall mounted [m]*		26		18		24		17		21		15		20		14			26		18	
Air throw, ceiling mount. [m]*		7,1		5,3		6,9		5,1		6,1		4,5		5,8		4,4			7,1		5,3	
Sound pressure level dB[A]**		59		53		59		53		59		53		59		53			59		53	
Water capacity [litres]		2,5				3,5				3,5				5,5								
Heat exchanger connections		R 1"				R 1¼"				R 1¼"				R 1¼"					DN 50 - DN 25			

* Bei $t_{LA} - t_{Raum}$ = 10K

** Sound pressure level measured 5 m from intake, room with average absorption; enclosed space approx. 1500 m³.

for LPHW

Type		1				2				3			
Speed [min⁻¹]		900		700		900		700		900		700	
Air vol. $\dot{V}_0$ [m³/h]		5300		400		5200		3900		4600		3500	
		$\dot{Q}_0$	t_{LA}	$\dot{Q}_0$	t_{LA}	$\dot{Q}_0$	t_{LA}	$\dot{Q}_0$	t_{LA}	$\dot{Q}_0$	t_{LA}	$\dot{Q}_0$	t_{LA}
	t_{LE}[°C]	kW	°C	kW	°C	kW	°C	kW	°C	kW	°C	kW	°C
PHW 110/90	- 15	72,2	21	61,0	25	93,2	33	77,5	38	106,3	46	87,7	51
	- 10	68,5	25	57,9	29	88,4	36	73,5	41	100,9	49	83,2	54
	- 5	64,8	29	54,8	33	83,7	39	69,6	44	95,6	52	78,9	57
	± 0	61,3	32	51,8	36	79,1	43	65,8	47	90,3	55	74,5	60
	+ 5	57,7	36	48,8	40	74,5	46	62,0	50	85,1	58	70,3	62
	+ 10	54,2	40	45,9	43	69,9	49	58,2	53	80,0	61	66,1	65
	+ 15	50,8	43	43,0	47	65,5	52	54,5	56	75,0	63	61,9	67
	+ 20	47,3	47	40,1	50	61,0	55	50,8	59	70,0	66	57,8	70
PHW 120/100	- 15	78,8	24	66,5	29	101,6	37	84,4	42	115,5	52	95,1	57
	- 10	75,1	28	63,4	33	96,8	40	80,4	46	110,0	55	90,6	60
	- 5	71,4	32	60,3	37	92,0	44	76,4	49	104,7	58	86,2	63
	± 0	67,8	36	57,3	40	87,4	47	72,6	52	99,4	61	81,9	66
	+ 5	64,2	40	54,3	44	82,7	50	68,7	55	94,2	63	77,6	68
	+ 10	60,7	43	51,3	47	78,2	54	65,0	58	89,0	66	73,4	71
	+ 15	57,2	47	48,4	51	73,7	57	61,2	61	84,0	69	69,2	74
	+ 20	53,7	51	45,5	54	69,2	60	57,5	64	78,9	72	65,1	76
PHW 130/100	- 15	80,5	25	68,1	30	103,9	38	86,4	44	118,6	53	97,9	59
	- 10	76,8	29	65,0	34	99,1	41	82,4	47	113,2	57	93,4	62
	- 5	73,2	33	61,9	38	94,3	45	78,5	50	107,8	60	89,0	65
	± 0	69,5	37	58,9	41	89,6	48	74,6	54	102,6	63	84,7	68
	+ 5	66,0	41	55,8	45	85,0	52	70,8	57	97,4	65	80,4	71
	+ 10	62,4	44	52,9	48	80,5	55	67,0	60	92,2	68	76,2	73
	+ 15	58,9	48	49,9	52	75,9	58	63,3	63	87,1	71	72,0	76
	+ 20	55,5	52	47,0	55	71,5	61	59,6	66	82,1	74	67,9	78
PHW 140/100	- 15	82,3	26	69,7	31	106,5	39	88,5	45	121,8	55	100,7	61
	- 10	78,6	30	66,6	35	101,4	43	84,5	49	116,4	58	96,2	64
	- 5	74,9	34	63,5	39	96,6	46	80,5	52	111,0	61	91,8	67
	± 0	71,3	38	60,4	42	92,0	50	76,7	55	105,7	64	87,5	70
	+ 5	67,7	42	57,4	46	87,3	53	72,8	58	100,5	67	83,2	73
	+ 10	64,2	45	54,4	50	82,7	56	69,0	61	95,3	70	78,9	76
	+ 15	60,7	49	51,5	53	78,2	59	65,3	65	90,2	73	74,7	78
	+ 20	57,2	52	48,6	57	73,8	63	61,6	68	85,2	76	70,6	81
PHW 140/110	- 15	87,1	29	73,6	34	112,3	42	93,2	48	127,7	59	105,2	65
	- 10	83,4	33	70,5	38	107,4	46	89,2	52	122,2	62	100,7	68
	- 5	79,7	36	67,4	41	102,6	49	85,3	55	116,9	65	96,3	71
	± 0	76,0	40	64,3	45	97,9	53	81,4	59	111,5	68	92,0	74
	+ 5	72,4	44	61,3	49	93,3	56	77,5	62	106,3	71	87,7	77
	+ 10	68,9	48	58,3	52	88,7	60	73,7	65	101,1	74	83,4	79
	+ 15	65,4	51	55,3	56	84,1	63	70,0	68	96,0	77	79,2	82
	+ 20	61,9	55	52,4	59	79,6	66	66,2	71	91,0	80	75,1	85

Motor output [kW] (3 x 400 V)	max. 0,34	max. 0,25	max. 0,34	max. 0,25	max. 0,34	max. 0,25
Curr. Consumpt. [A] (3 x 400 V)	max. 0,79	max. 0,35	max. 0,79	max. 0,35	max. 0,79	max. 0,35
Air throw, wall mounted [m]*	26	18	24	17	21	15
Air throw, ceiling mount. [m]*	7,1	5,3	6,9	5,1	6,1	4,5
Sound pressure level dB[A]**	59	53	59	53	59	53
Water capacity [litres]	2,5		3,5		3,5	
Heat exchanger connections	R 1"		R 1¼"		R 1¼"	

Performance tables

for LPHW

Type		1				2				3				4			
Speed [min⁻¹]		900		700		900		700		900		700		900		700	
Air vol. $\dot{V}_0$ [m³/h]		9000		6700		8800		6500		8300		6000		7700		5600	
		$\dot{Q}_0$	t_{LA}	$\dot{Q}_0$	t_{LA}	$\dot{Q}_0$	t_{LA}	$\dot{Q}_0$	t_{LA}	$\dot{Q}_0$	t_{LA}	$\dot{Q}_0$	t_{LA}	$\dot{Q}_0$	t_{LA}	$\dot{Q}_0$	t_{LA}
	t_{LE}[°C]	kW	°C	kW	°C	kW	°C	kW	°C	kW	°C	kW	°C	kW	°C	kW	°C
LPHW 45/35	- 15	57,1	2	48,1	4	72,8	7	60,4	10	93,9	15	75,1	18	107,5	22	84,5	25
	- 10	51,2	5	43,1	7	65,2	10	54,1	12	84,3	17	67,5	20	96,8	24	76,1	27
	- 5	45,3	9	38,2	11	57,7	13	47,9	15	74,8	20	60,0	23	86,1	26	67,9	28
	± 0	39,6	12	33,4	14	50,3	16	41,8	18	65,5	22	52,5	25	75,7	28	59,7	30
	+ 5	33,9	16	28,6	17	43,0	19	35,7	21	56,3	24	45,2	27	65,4	29	51,7	31
	+ 10	28,3	19	23,9	20	35,7	22	29,8	23	47,2	27	38,0	28	55,1	31	43,7	33
	+ 15	22,8	22	19,3	24	28,6	25	23,9	26	38,2	29	30,9	30	45,0	32	35,8	34
	+ 20	17,3	26	14,7	27	21,6	27	18,1	28	29,3	31	23,8	32	35,0	34	27,9	35
LPHW 50/40	- 15	62,9	4	53,0	6	80,4	9	66,5	12	103,1	18	82,3	21	117,5	25	92,2	29
	- 10	57,0	7	48,0	9	72,7	12	60,2	15	93,4	20	74,7	24	106,7	27	83,8	30
	- 5	51,1	11	43,0	13	65,1	15	54,0	18	83,9	23	67,1	26	96,1	29	75,5	32
	± 0	45,3	14	38,2	16	57,7	18	47,8	21	74,6	25	59,7	28	85,6	31	67,4	34
	+ 5	39,6	18	33,4	19	50,3	21	41,8	23	65,3	27	52,3	30	75,2	33	59,3	35
	+ 10	33,9	21	28,7	22	43,0	24	35,8	26	56,2	30	45,1	32	65,0	35	51,3	37
	+ 15	28,4	24	24,0	26	35,9	27	29,9	29	47,2	32	37,9	34	54,9	36	43,5	38
	+ 20	22,9	28	19,4	29	28,8	30	24,0	31	38,2	34	30,9	35	44,9	38	35,7	39
LPHW 60/40	- 15	64,6	4	54,5	7	81,9	10	68,2	13	107,3	19	86,2	23	124,4	28	98,3	32
	- 10	58,6	8	49,5	10	74,3	13	61,9	16	97,6	22	78,5	25	113,6	30	89,8	33
	- 5	52,8	11	44,6	13	66,8	16	55,7	19	88,1	24	70,9	28	102,9	32	81,5	35
	± 0	47,0	15	39,8	17	59,3	19	49,5	21	78,7	27	63,5	30	92,3	34	73,2	37
	+ 5	41,3	18	35,0	20	52,0	22	43,5	24	69,4	29	56,1	32	81,9	35	65,1	38
	+ 10	35,6	22	30,2	23	44,7	25	37,5	27	60,2	31	48,7	34	71,5	37	57,0	40
	+ 15	30,1	25	25,5	26	37,5	28	31,5	29	51,1	33	41,5	35	61,2	39	48,9	41
	+ 20	24,5	28	20,9	29	30,4	30	25,6	32	42,0	35	34,2	37	50,9	40	40,8	42
LPHW 70/50	- 15	76,5	8	64,4	10	97,3	14	80,7	18	125,9	25	100,8	30	144,5	35	113,7	39
	- 10	70,5	11	59,4	14	89,5	18	74,3	21	116,2	28	93,0	32	133,6	37	105,2	41
	- 5	64,5	15	54,4	17	81,9	21	68,1	24	106,6	30	85,4	34	122,9	39	96,9	43
	± 0	58,7	18	49,5	21	74,4	24	61,9	27	97,1	33	77,9	36	112,3	41	88,6	44
	+ 5	52,9	22	44,7	24	67,0	27	55,7	30	87,8	35	70,5	39	101,9	43	80,5	46
	+ 10	47,2	25	39,9	27	59,6	30	49,7	32	78,5	38	63,2	41	91,5	45	72,4	48
	+ 15	41,5	29	35,2	31	52,4	33	43,7	35	69,4	40	55,9	43	81,3	46	64,5	49
	+ 20	35,9	32	30,5	34	45,2	35	37,8	37	60,3	42	48,7	44	71,1	48	56,6	50
LPHW 80/60	- 15	88,2	11	74,2	14	112,3	19	93,0	23	144,0	31	114,9	36	164,0	41	128,6	46
	- 10	82,1	15	69,1	18	104,5	22	86,6	26	134,3	34	107,2	38	153,0	44	120,1	48
	- 5	76,1	18	64,1	21	96,8	25	80,2	29	124,6	36	99,6	41	142,3	46	111,8	50
	± 0	70,2	22	59,1	25	89,2	28	74,0	32	115,1	39	92,0	43	131,7	48	103,5	52
	+ 5	64,4	25	54,2	28	81,7	32	67,8	35	105,7	41	84,6	45	121,3	50	95,4	54
	+ 10	58,6	29	49,4	31	74,3	35	61,7	38	96,4	44	77,2	47	110,9	52	87,4	55
	+ 15	52,9	32	44,6	35	67,0	38	55,7	40	87,2	46	70,0	49	100,7	54	79,4	57
	+ 20	47,2	36	39,9	38	59,7	40	49,7	43	78,2	48	62,8	51	90,6	55	71,6	58
LPHW 90/70	- 15	99,7	14	83,8	18	127,1	23	105,0	28	161,8	37	128,8	42	182,9	48	143,0	53
	- 10	93,6	18	78,7	22	119,3	27	98,6	31	152,0	39	121,0	45	172,0	50	134,5	55
	- 5	87,6	22	73,6	25	111,5	30	92,2	34	142,2	42	113,3	47	161,2	53	126,2	57
	± 0	81,6	25	68,6	29	103,8	33	85,8	37	132,7	45	105,8	49	150,6	55	118,0	59
	+ 5	75,7	29	63,7	32	96,2	36	79,6	40	123,2	47	98,3	52	140,1	57	109,8	61
	+ 10	69,8	33	58,3	36	88,7	39	73,5	43	113,9	50	90,9	54	129,7	59	101,8	63
	+ 15	64,1	36	54,0	39	81,3	42	67,4	46	104,7	52	83,6	56	119,5	61	93,9	65
	+ 20	58,4	40	49,2	42	74,0	45	61,4	48	95,6	55	76,4	58	109,4	63	86,0	66
Motor output [kW] (3 x 400 V)		max. 0,75		max. 0,50		max. 0,75		max. 0,50		max. 0,75		max. 0,50		max. 0,75		max. 0,50	
Curr. Consumpt. [A] (3 x 400 V)		max. 1,6		max. 0,85		max. 1,6		max. 0,85		max. 1,6		max. 0,85		max. 1,6		max. 0,85	
Air throw, wall mounted [m]*		30		23		30		22		28		20		26		20	
Air throw, ceiling mount. [m]*		7,7		5,6		7,6		5,5		7,1		5,0		6,6		4,6	
Sound pressure level dB[A]**		64		58		64		58		64		58		64		58	
Water capacity [litres]		3,5				5,5				7,5				9,5			
Heat exchanger connections		R 1"				R 1½"				R 1½"				R 1½"			

for saturated steam

		D			
		900		700	
		9000		6700	
		$\dot{Q}_0$	t_{LA}	$\dot{Q}_0$	t_{LA}
	t_{LE}[°C]	kW	°C	kW	°C
1,1 bar	- 15	121,8	21	101,8	25
	- 10	115,8	25	96,8	29
	- 5	109,9	29	91,9	33
	± 0	104,1	33	87,0	36
	+ 5	98,4	36	82,2	40
	+ 10	92,7	40	77,5	44
	+ 15	87,1	44	72,8	47
	+ 20	81,5	47	68,1	51
1,5 bar	- 15	130,8	24	109,3	28
	- 10	124,8	28	104,3	32
	- 5	118,9	31	99,3	36
	± 0	113,0	35	94,4	40
	+ 5	107,2	39	89,6	43
	+ 10	101,5	43	84,8	47
	+ 15	95,9	47	80,1	50
	+ 20	90,3	50	75,4	54
2,0 bar	- 15	139,6	26	116,6	31
	- 10	133,6	30	111,6	35
	- 5	127,6	34	106,6	39
	± 0	121,7	38	101,6	43
	+ 5	115,8	42	96,8	46
	+ 10	110,1	46	92,0	50
	+ 15	104,4	49	87,2	54
	+ 20	98,8	53	82,5	57
3,0 bar	- 15	152,7	30	127,5	35
	- 10	146,6	34	122,4	39
	- 5	140,5	38	117,3	43
	± 0	134,6	42	112,4	47
	+ 5	128,7	46	107,5	51
	+ 10	122,9	50	102,6	55
	+ 15	117,2	54	97,8	58
	+ 20	111,5	57	93,1	62
5,0 bar	- 15	170,5	35	142,3	41
	- 10	164,3	39	137,1	45
	- 5	158,2	43	132,0	49
	± 0	152,2	47	127,0	53
	+ 5	146,2	51	122,0	57
	+ 10	140,4	55	117,1	61
	+ 15	134,6	59	112,3	65
	+ 20	128,8	63	107,5	68
9,0 bar	- 15	193,1	42	161,0	49
	- 10	186,8	46	155,7	53
	- 5	180,6	50	150,6	57
	± 0	174,5	54	145,5	61
	+ 5	168,5	59	140,4	65
	+ 10	162,5	63	135,4	69
	+ 15	156,6	67	130,5	73
	+ 20	150,8	70	125,7	76
		max. 0,75		max. 0,50	
		max. 1,6		max. 0,55	
		30		23	
		7,7		5,6	
		64		58	
		DN 65 - DN 32			

* Bei $t_{LA} - t_{Raum}$ = 10K

** Sound pressure level measured 5 m from intake, room with average absorption; enclosed space approx. 1500 m³.

for LPHW

Type		1				2				3			
Speed [min⁻¹]		900		700		900		700		900		700	
Air vol. $\dot{V}_0$ [m³/h]		9000		6700		8800		6500		8300		6000	
		$\dot{Q}_0$	t_{LA}	$\dot{Q}_0$	t_{LA}	$\dot{Q}_0$	t_{LA}	$\dot{Q}_0$	t_{LA}	$\dot{Q}_0$	t_{LA}	$\dot{Q}_0$	t_{LA}
	t_{LE}[°C]	kW	°C	kW	°C	kW	°C	kW	°C	kW	°C	kW	°C
PHW 110/90	- 15	122,5	21	102,7	26	156,1	32	128,5	37	196,3	48	155,6	54
	- 10	116,3	25	97,5	29	148,1	35	122,0	41	186,3	51	147,7	57
	- 5	110,1	29	92,3	33	140,1	39	115,5	44	176,5	54	140,0	59
	± 0	104,0	32	87,2	37	132,3	42	109,1	47	166,8	56	132,4	62
	+ 5	98,0	36	82,2	40	124,6	45	102,7	50	157,3	59	124,8	54
	+ 10	92,0	40	77,2	44	117,0	49	96,5	53	147,8	62	117,4	67
	+ 15	86,2	43	72,3	47	109,5	52	90,3	56	138,5	64	110,1	69
	+ 20	80,4	47	67,5	50	102,1	55	84,2	59	129,3	67	102,8	72
PHW 120/100	- 15	133,7	24	112,0	29	170,3	36	140,1	42	213,1	53	168,6	59
	- 10	127,4	28	106,8	33	162,2	40	133,4	45	203,1	56	160,7	62
	- 5	121,2	32	101,6	37	154,2	43	126,9	49	193,2	59	152,9	65
	± 0	115,1	36	96,4	40	146,3	47	120,4	52	183,5	62	145,3	68
	+ 5	109,0	40	91,4	44	138,6	50	114,1	55	173,8	65	137,7	71
	+ 10	103,0	43	86,4	47	130,9	53	107,8	58	164,4	68	130,2	73
	+ 15	97,1	47	81,4	51	123,3	56	101,6	61	155,0	70	122,9	76
	+ 20	91,2	50	76,5	54	115,8	60	95,4	64	145,8	73	115,6	78
PHW 130/100	- 15	136,7	25	114,7	30	173,9	37	143,3	43	219,2	55	173,8	62
	- 10	130,4	29	109,4	34	165,8	41	136,6	47	209,1	58	165,9	65
	- 5	124,2	33	104,2	38	157,8	44	130,1	50	199,3	61	158,1	68
	± 0	118,0	37	99,1	41	149,9	48	123,7	53	189,6	64	150,5	70
	+ 5	112,0	41	94,0	45	142,2	51	117,3	57	180,0	67	142,9	73
	+ 10	106,0	44	89,0	49	134,5	54	111,0	60	170,4	70	135,4	76
	+ 15	100,0	48	84,0	52	126,9	58	104,8	63	161,0	72	128,0	78
	+ 20	94,2	51	79,1	56	119,4	61	98,6	66	151,8	75	120,7	81
PHW 140/100	- 15	139,8	26	117,4	31	177,6	38	146,6	45	225,2	57	178,9	64
	- 10	133,5	30	112,1	35	169,5	42	139,9	48	215,3	60	171,0	67
	- 5	127,2	34	106,9	39	161,5	46	133,4	52	205,3	63	163,3	70
	± 0	121,1	38	101,7	43	153,6	49	126,9	55	195,5	66	155,6	73
	+ 5	115,0	41	96,7	46	145,8	52	120,5	58	185,9	69	148,0	75
	+ 10	109,0	45	91,6	50	138,1	56	114,2	61	176,4	72	140,5	78
	+ 15	103,0	49	86,7	53	130,5	59	108,0	64	167,0	75	133,1	81
	+ 20	97,2	52	81,8	57	123,0	62	101,8	67	157,7	77	125,7	83
PHW 140/110	- 15	147,9	29	124,0	34	188,0	42	154,7	48	235,9	60	186,6	67
	- 10	141,5	33	118,6	38	179,8	45	148,0	52	225,7	63	178,7	70
	- 5	135,3	36	113,4	42	171,8	49	141,4	55	215,8	67	170,9	73
	± 0	129,1	40	108,2	45	163,9	52	134,9	58	206,0	70	163,2	76
	+ 5	123,0	44	103,1	49	156,1	56	128,5	61	196,3	73	155,6	79
	+ 10	116,9	48	98,1	53	148,3	59	122,2	65	186,8	75	148,1	82
	+ 15	110,9	51	93,1	56	140,7	62	116,0	68	177,4	78	140,7	84
	+ 20	105,0	55	88,1	60	133,2	66	109,8	71	168,1	81	133,4	87

Motor output [kW] (3 x 400 V)	max. 0,75	max. 0,50	max. 0,75	max. 0,50	max. 0,75	max. 0,50
Curr. Consumpt. [A] (3 x 400 V)	max. 0,1,6	max. 0,55	max. 1,6	max. 0,55	max. 1,6	max. 0,5
Air throw, wall mounted [m]*	30	23	30	22	28	20
Air throw, ceiling mount. [m]*	7,7	5,6	7,6	5,6	7,1	5,0
Sound pressure level dB[A]**	64	58	64	58	64	58
Water capacity [litres]	3,5		5,5		7,5	
Heat exchanger connections	R 1"		R 1½"		R 1½"	

Hydraulic resistance LH-EC / LH 25

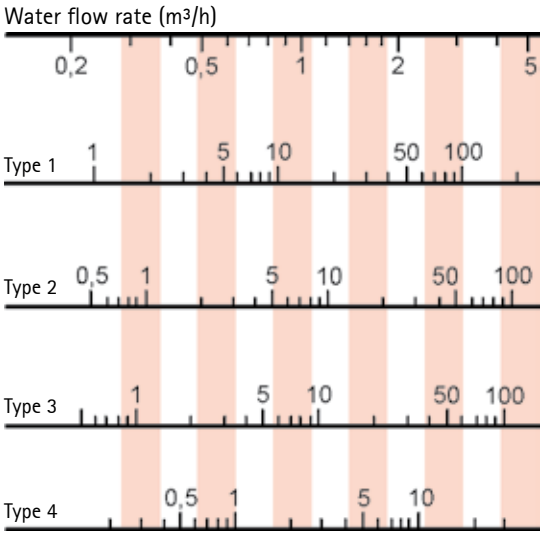

Hydraulic resistance LH-EC / LH 40

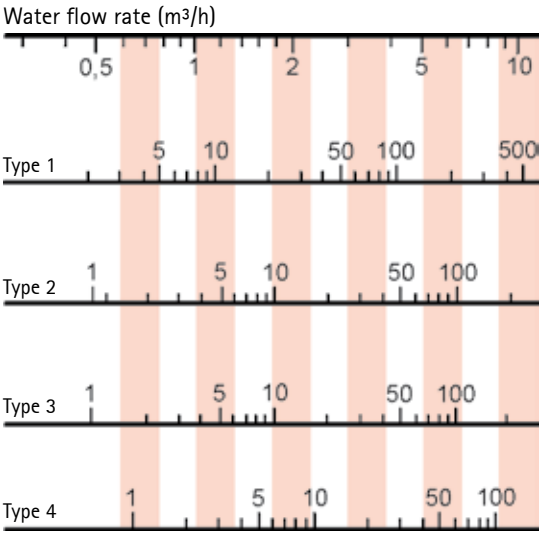

Hydraulic resistance LH-EC / LH 63

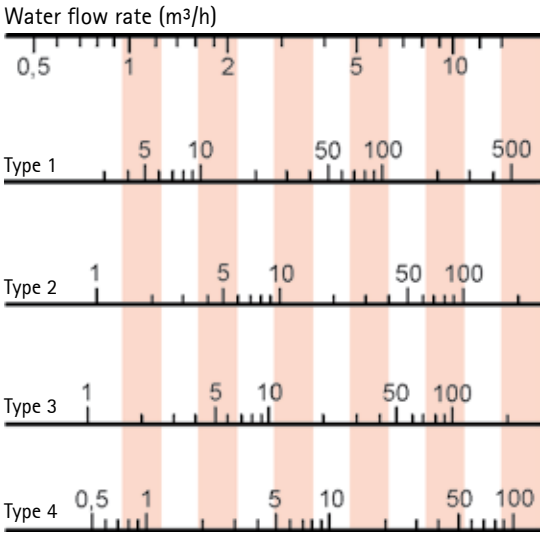

Hydraulic resistance LH-EC / LH 100

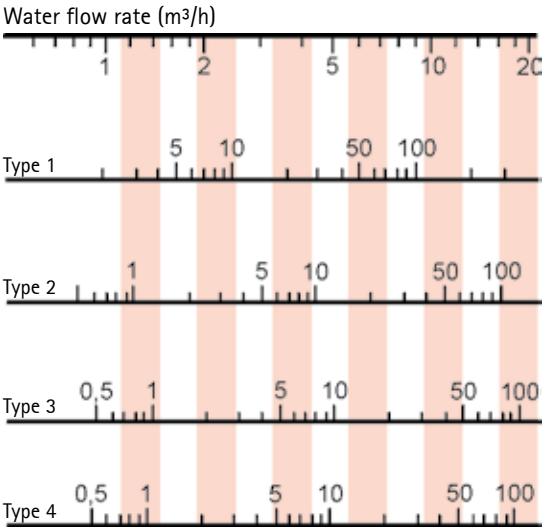

Shut-off sets for heat exchangers


straight-way type


rectangular type

Shut-off set straight way or rectangular type for flow and return of heat exchanger LH-EC / LH 25 type 2/3/4, LH-EC / LH 40: type 2/3/4, LH-EC / LH 63: type 1, LH-EC / LH 100: type 1 . suitable for LPHW/MPHW up to max 110°C and an operating pressure up to max. 10 bar, consisting of:

Screwed fitting 1" for connection of flow and return including flat sealing.

Air separator with automatic shut-off valve in the flow.

Filling and draining cock with cover and hose connection in the return.

Ball valves with internal thread 1" in both flow and return.

Connection possibility 3/4" external thread (i.e. for thermometer) in both flow and return.

Hydraulic balancing valve

DN 20	4 - 15	l/min
DN 20	8 - 30	l/min
DN 25	6 - 20	l/min
DN 25	10 - 40	l/min
DN 32	20 - 70	l/min
DN 40	30 - 120	l/min

Flange set

consisting of 2 threaded flanges,

2 welding neck flanges and 2 flat gaskets,

plus hexagonal bolts and hexagonal nuts

DN 20	R ¾"	LH-EC/LH 25, 40	type 1
		LH 25-ATEX	type 1
DN 25	R 1"	LH-EC/LH 25, 40	type 2/3/4
		LH 25/40-ATEX	type 2/3/4
		LH-EC/LH 63,100	type 1
		LH 63/100-ATEX	type 1
DN 32	R 1¼"	LH-EC/LH 63	type 2/3/4
		LH 63-ATEX	type 2/3/4
DN 40	R 1½"	LH-EC/LH 100	type 2/3/4
		LH 100-ATEX	type 2/3/4

Fastening brackets

For wall and ceiling installation, of pentapost sheet steel 2mm, galvanized.

Complete set consisting of:

2 Brackets

Hexagon screws for assembly to LH-EC / LH-Unit.

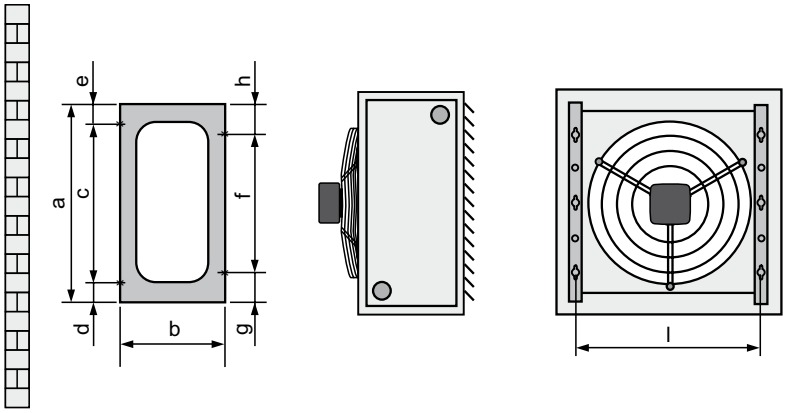

LH-EC / LH	a	b	c	d	e	f	g	h	i
25	480	250	380	70	30	170	155	155	434
40	480	250	2x170	90	50	2x170	70	70	564
63	784	350	170+340+170	72	32	3x170	137	137	734
100	784	350	170+340+170	72	32	3x170	137	137	894

Fastening set for concrete bar-vertical

For fastening an LH-EC / LH-Unit to a concrete bar by suspending it into a pre-assembled fixing rail. Dowels and screws to be provided on site. Set consisting of: fixing rail, 2 suspending rails (galvanized sheet steel), screws and nuts.

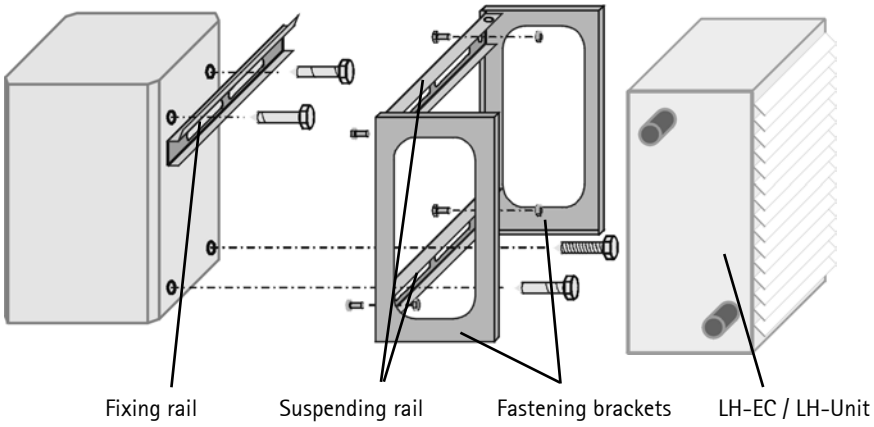

Fastening set fot steel bar-vertical

For fastening an LH-EC / LH-unit to a steel bar by suspending it into a preassembled (via clamping jaws) fixing rail. Suitable for all types of steel bars at a flange width „b" of 100-300 mm, and a flange thickness „t" of 6-21 mm.
Consisting of: Fixing bracket, 2 pcs. suspending rails (galvanized sheet steel), 4 pcs clamping jaws, screws and nuts.

LH-EC / LH	b	t
25	100-300	6-21
40	100-300	6-21

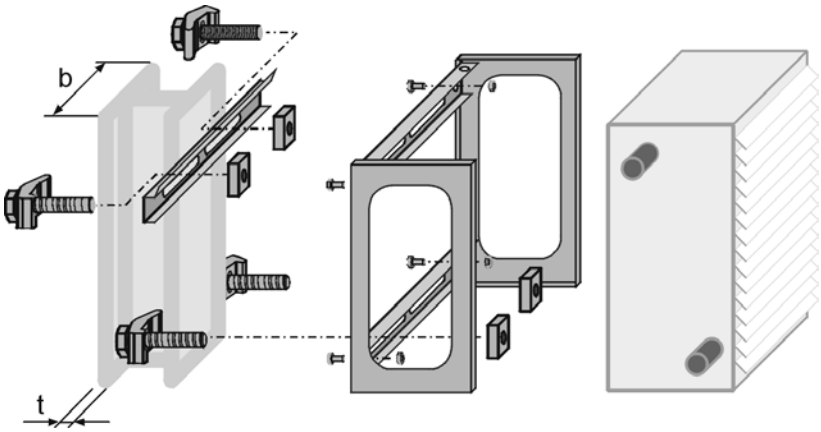

Fastening set for steel bar - horizontal and inclined without inclination equalization.

For fastening an LH-EC / LH-Unit to a horizontal or inclined steel bar at a flange width „b" of 100-300 mm, and a flange thickness „t" of 6-21 mm.
Consisting of: 2 pcs. suspending rails (galvanized sheet steel), 4 pcs clamping jaws, screws and nuts.
* Threaded rods size M8 on site.
Installation examples:

LH-EC / LH	b	t
25	100-300	6-21
40	100-300	6-21

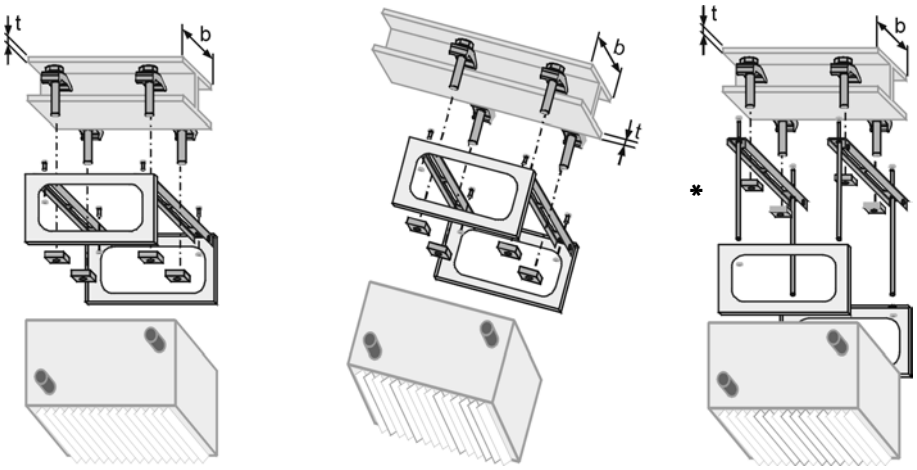

Direct fastening on horizontal steel bar

Direct fastening on inclined steel bar

Indirect fastening on horizontal steel bar

Attention:

Prior to the application of fastening sets the static conditions of the concrete or steel bars have to be checked and taken into account. Assembly exclusively with basic units at a total depth of 300 mm.

Fastening set for steel bar – inclined with inclination equalization

For fastening an LH-EC / LH-Unit to a steel bar at a flange width „b" of 100-300mm, and a flange thickness „t" of 6-21mm.
Consisting of: 2 pcs. suspending rails (galvanized sheet steel), 4 pcs. clamping jaws, 4 pcs. inclination equalization.

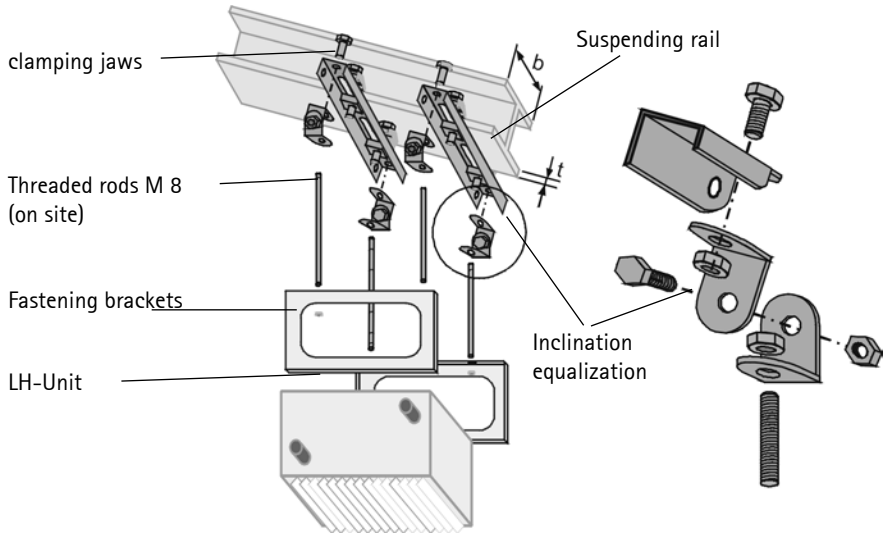

LH-EC / LH	b	t
25	100-300	6-21
40	100-300	6-21

Angle brackets

For wall-mount or ceiling-mount LH-EC / LH unit heaters complete with mixed air, recirculating air, fresh air or filter section galvanised.
Four angle brackets are required for installation. These brackets are enclosed with the intake accessory, as appropriate. (sealing towards wall / ceiling on site)

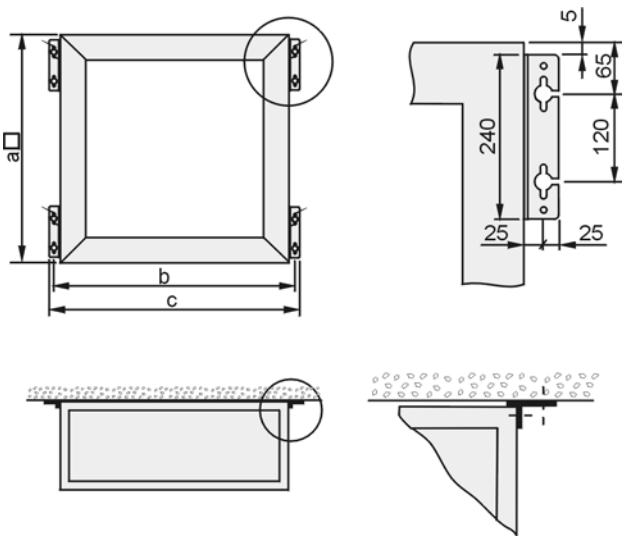

LH-EC / LH	a	b	c
25	500	550	600
40	630	680	730
63	800	850	900
100	1000	1050	1100

Discharge cone

Increases the air throw of high-mounted unit heaters.
(See Page 50 for air throws)

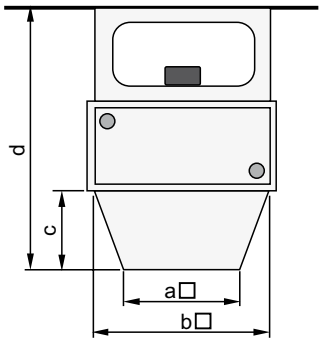

LH-EC / LH	a	b	c	d
25	280	460	200	750
40	370	590	240	790
63	430	760	270	920
100	530	920	320	1010

Discharge nozzle

For long air throws, suitable for air curtains at doors.
Oulet temperature for air curtain approx. 10-15 °C higher than room temperature.
(See Page 50 for air throws)

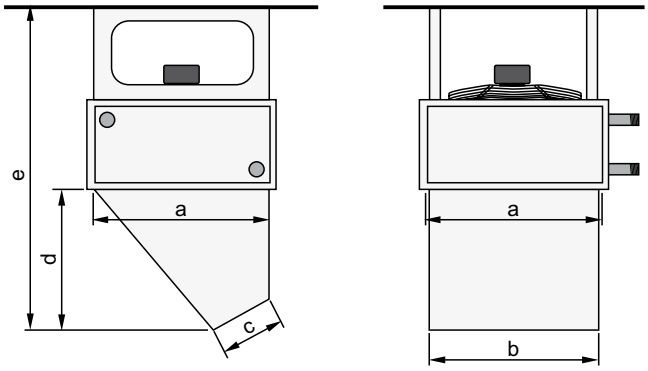

LH-EC / LH	a	b	c	d	e
25	460	420	190	390	940
40	590	550	250	480	1030
63	760	720	260	585	1235
100	920	880	320	685	1375

Four-way-discharge

With adjustable vanes, suitable for heating low-ceilinged rooms,
air is distributed uniformly to all four sides.

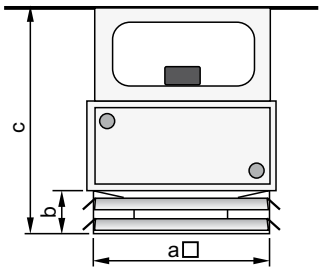

LH-EC / LH	a	b	c
25	500	149	705
40	630	159	705
63	800	159	805
100	1000	159	845

Discharge cross

Improves air flow through the room and temperature distribution by thoroughly mixing the current of warm air with the air in the room.

The temperature of the warm air stream is lower, so the air throw is longer.

Reduces air temperature close to the ceiling, so less heat loss due to ventilation and transmission - up to 15% energy savings.
(See Pages 50 for air throws).

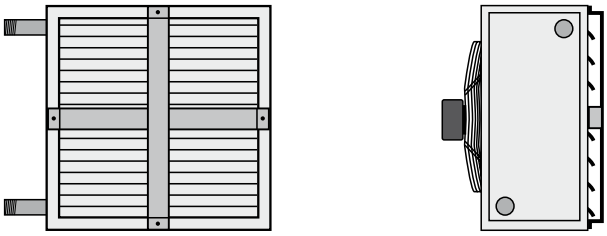

Wide-spread discharge

Spreads the warm air stream discharged to the side.

Air discharge spread up to approx. 120°; louvre vanes individually adjustable, horizontally and vertically.

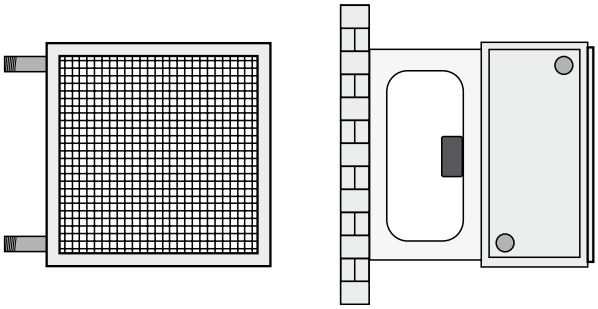

Induction louvre

Wall-mounted unit

Ceiling-mounted unit

Induction louvre for optimising air throw and temperature distribution

Functional description

The induction louvre divides the warm air stream from the unit heater and inducts secondary air (ambient air) from behind the vanes directly into the core of the warm air stream.

The inducted secondary air causes intensive mixing of the warm air with the ambient air over a very short distance, thus reducing the temperature of the warm air stream.

This temperature reduction decreases the ascending force of the warm air and increases the air throw, particularly when the unit heater is operating at high leaving air temperatures.

The induction louvre (and thus the direction of the warm air stream) is adjustable either by hand or with the aid of an actuator and can therefore be set to suit any operating conditions or room.

Energy savings

Avoids high temperatures close to the ceiling and the associated heat losses by ventilation and transmission. Energy savings up to 15% are possible.

Easily retrofitted for upgrading

The induction louvre is easily installed, so upgrading existing systems poses no problems.

Scope of supply

Induction louvre monted to LH-Unit, with actuator 230V/50 Hz suitable for drive via key button.
Alternative: Induction lowre with secondary air cone, manually adjustable.

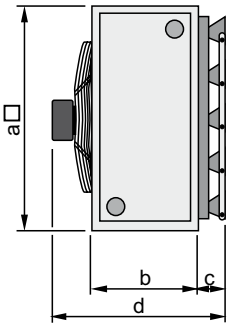

Dimensions basic unit with induction louvre LH-EC / LH 25-100

LH-EC / LH	a	b	c	d
25	500	300	120	530
40	630	300	120	535
63	800	300	120	540
100	1000	340	120	605

Key button for 230V / 50Hz
Actuator for induction louvre

for surface / concealed type installation; for progressive adjustment of the induction louvre and optimisation of the airthrow.

Operating voltage	230 V
Current max.	10 A
Degree of protection	IP 20

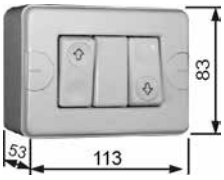

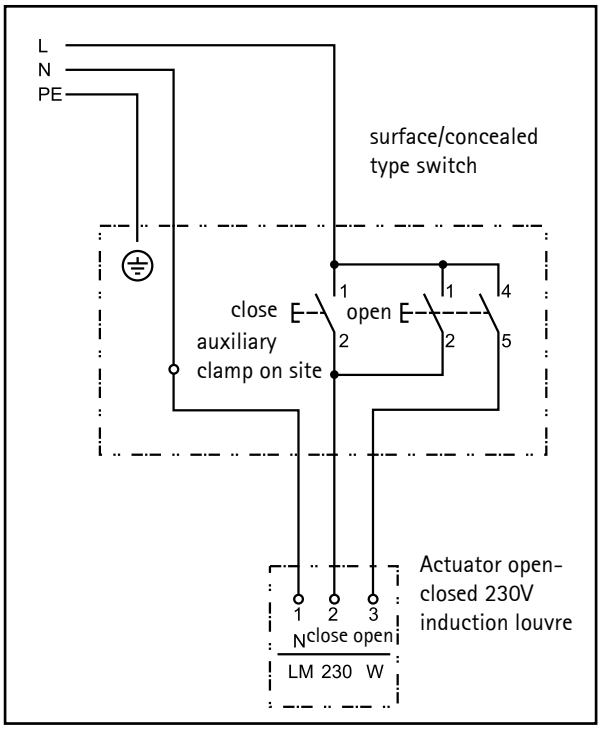

Induction louvre consulting advice LH-EC / LH

Clearances

Clearances for wall-mounted units and clearances for ceiling-mounted units, vanes vertical.

Ceiling-mounted unit, vanes deflected.

LH-EC / LH	25	40	63	100
LH-EC / LH from LH-EC / LH LH-EC / LH to wall	7-9m 3-4 m	9-11 m 3-5 m	11-13 m 4-6 m	13-15 m 5-7 m
LH-EC / LH from LH-EC / LH LH-EC / LH to wall	-12 m 4-6 m	- 14 m 5-7 m	- 16 m 6-8 m	- 18 m 7-9 m

Air throw: wall-mounted unit

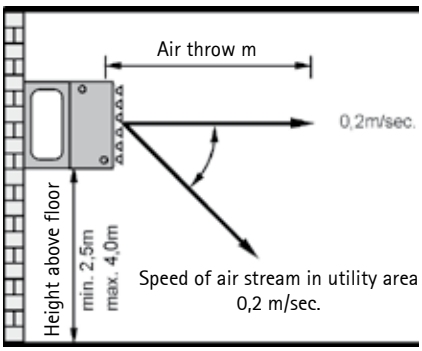

LH-EC / LH	25				40				63				100			
Type	1	2	3	4	1	2	3	4	1	2	3	4	1	2	3	4
Air throw [m]*																
high speed	19	18	16	15	27	26	23	21	29	27	25	23	36	35	34	32
low speed	16	15	13	12	20	19	16	14	22	20	18	17	30	28	26	25

* Figures represent air throws at defined operating conditions. (mixing temperature 10 K above room temperature)

Height above floor, ceiling-mounted unit

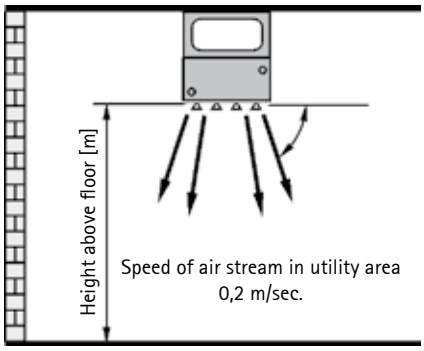

Requird height (m) * LH-EC / LH Type	25				40				63				100			
	1	2	3	4	1	2	3	4	1	2	3	4	1	2	3	4
ΔT=20K; Vanes deflected	5	4,5	4	3,5	6	5,5	5	4,5	7	6,5	6	5,5	8	7,5	7	6,5
ΔT=20K; Vanes vertical	6	5,5	5	4,5	7	6,5	6	5,5	8	7,5	7	6,5	9	8,5	8	7,5
ΔT=10K; Vanes deflected	6	5,5	5	4,5	7	6,5	6	5,5	8	7,5	7	6,5	9	8,5	8	7,5
ΔT=10K; Vanes vertical	7	6,5	6	5,5	8	7,5	7	6,5	9	8,5	8	7,5	10	9,5	9	8,5

* The optimum vane angle depends on the local situation, i. e. room geometry, furniture, temperature stratification and air distribution. The data are standard values for an approximate selection.
ΔT = Air outlet temperature - Air intake temperature

Height wall-mounted unit with adaption cone and induction louvre

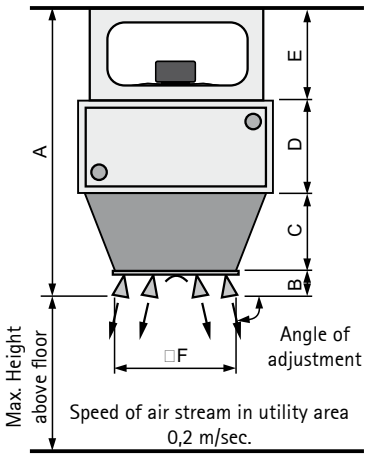

	A	B	C	D	E	F
LH-EC / LH 63	1040	120	270	300	350	460
LH-EC / LH 100	1130	120	320	340	350	590

Max. height above floor (m) *	LH-EC / LH	63		100	
	Type	1	2	1	2
Air volume	[m³/h]	3300	3200	5600	5500
ΔT=10K; Vanes deflected		12	11	11	10
ΔT=10K; Vanes vertical		13,5	12,5	12,5	11,5

* The optimum vane angle depends on the local situation, i. e. room geometry, furniture, temperature stratification and air distribution. The data are standard values for an approximate selection.
ΔT = Air outlet temperature - Air intake temperature

Extended heights on request

(for outside air/mixed air function the requirements in accordance with VDI 6022 have to be adhered to, in Germany)

Mixing box

Mixing box galvanized. For adjusting the room's air change rate. Fresh air intake at rear, recirculated air intake at side or from above or below if mixing box is turned through 90°. Stepless adjustment from recirculated air only through mixed air to fresh air only, manual or with 230 V stepless actuator.

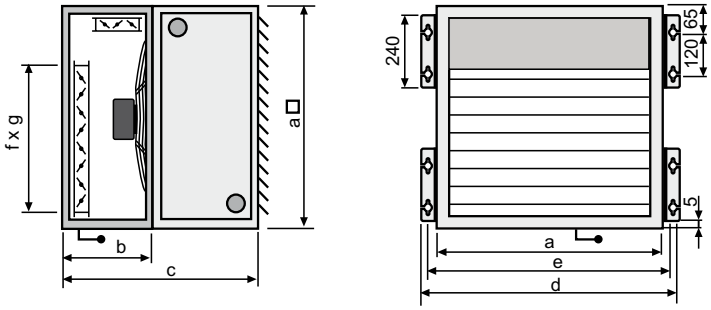

LH-EC / LH	a	b	c	d	e	f	g
25	500	500	800	600	550	400	400
40	630	500	800	730	680	360	530
63	800	500	800	900	850	530	700
100	1000	540	880	1100	1050	690	860

Return air box

Return air box galvanized, has two side intake grilles for recirculating air; box can also be turned through 90° for intake from above and below.

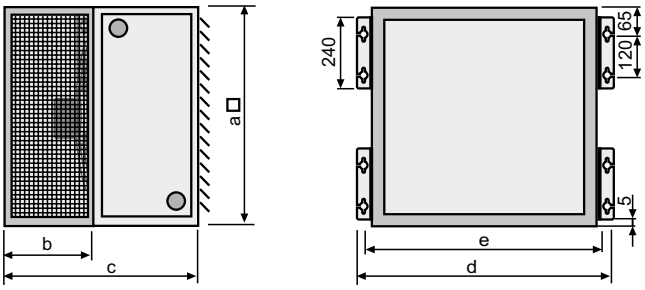

LH-EC / LH	a	b	c	d	e
25	500	300	600	600	550
40	630	500	800	730	680
63	800	500	800	900	850
100	1000	540	880	1100	1050

Filter box

Galvanized filter box with dust trap for fresh or mixed air operation, filter class G4.
Angle brackets optional.

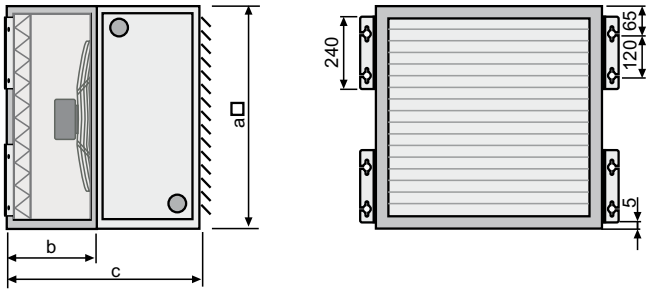

LH-EC / LH	a	b	c
25	500	300	600
40	630	300	600
63	800	300	600
100	1000	340	680

Flexible connection

Flexible connection, 4-hole profile; galvanized sheet steel.

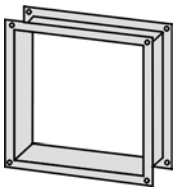

stepless speed control
EC fan 230 V

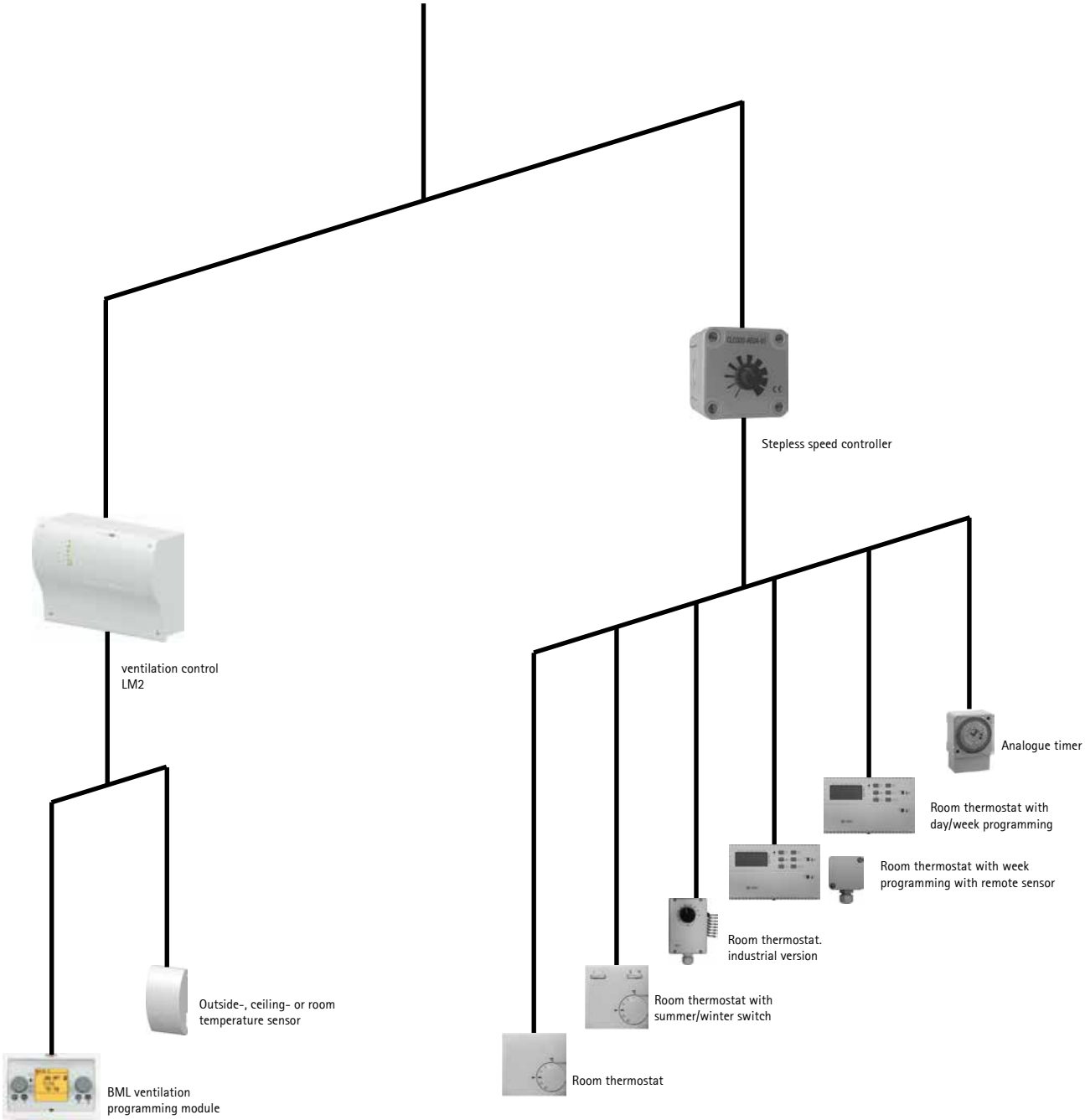

Three-phase motor
3 x 400 V

Single-phase a.c. motor
1 x 230 V

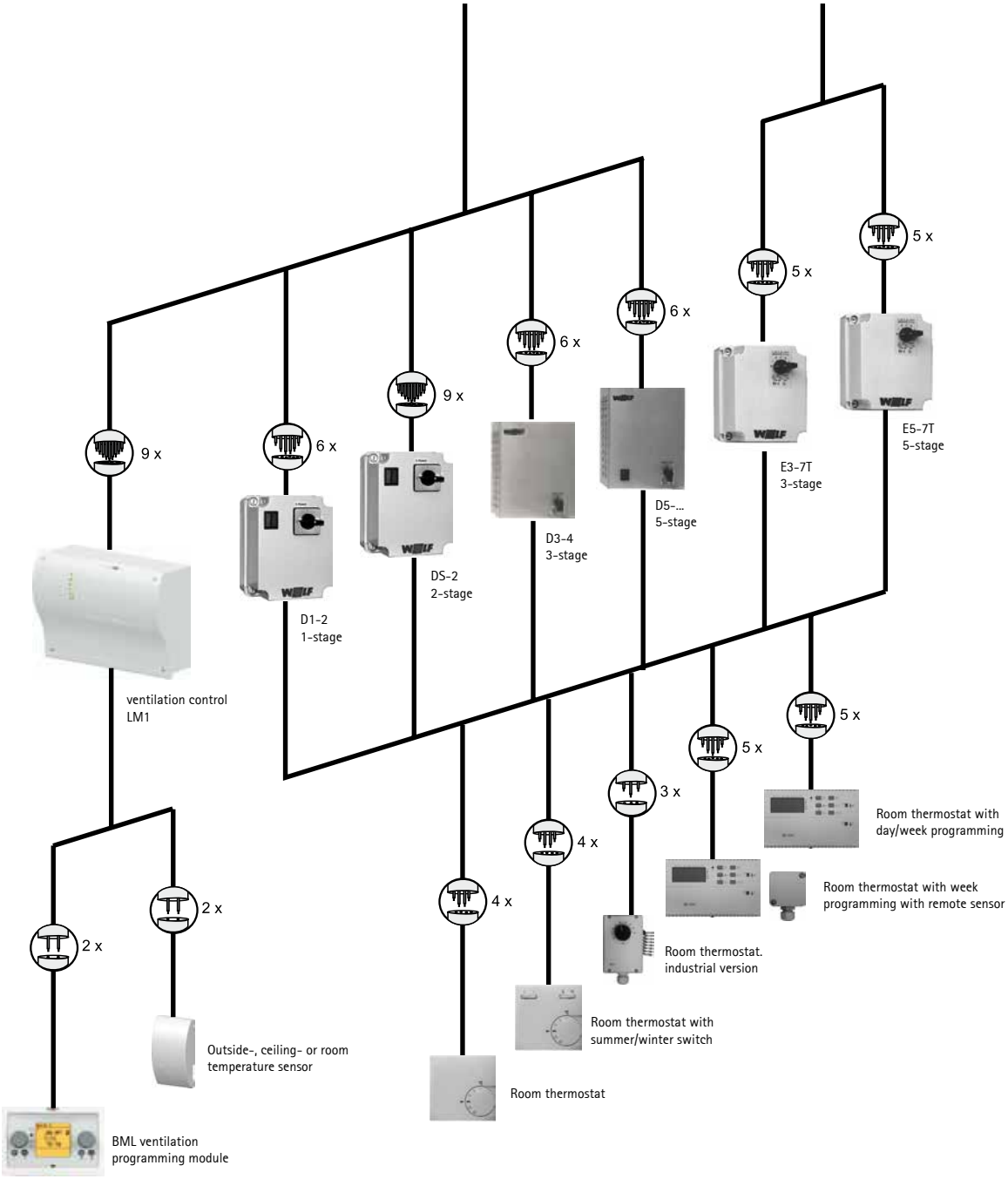

1-stage switch D1-2

For single-speed operation of one or more unit heaters with thermistor-type motor protection and restart disablement.

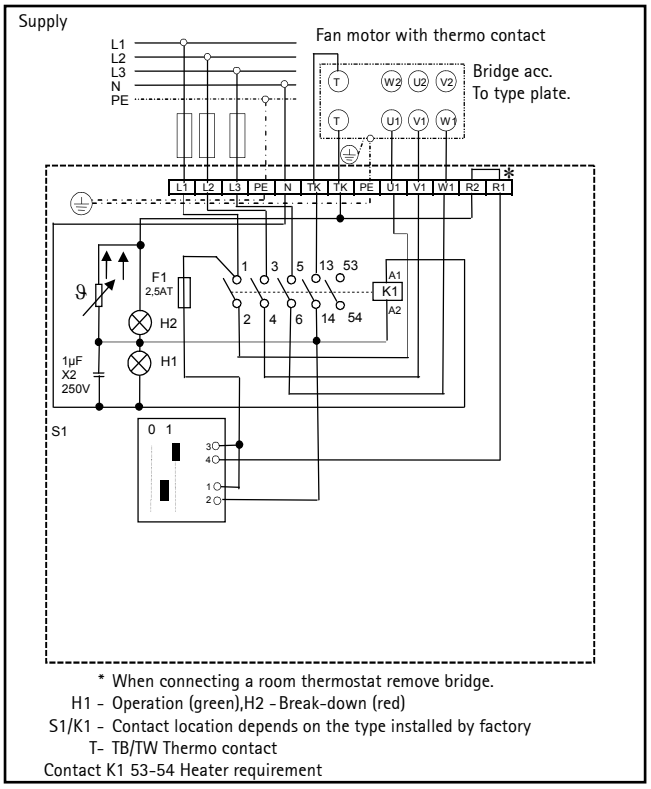

Operating voltage	400 V
Control voltage	230 V
Capacity, max.	8 A
Weight	0,9 kg
Degree of protection	IP 54

Automatic restart when winding temperature drops (motor).
Restart by setting multistage switch to 0 position and then select desired speed.

2-stage switch DS-2

For two-speed operation of one or more unit heaters with thermistor-type motor protection and restart disablement.

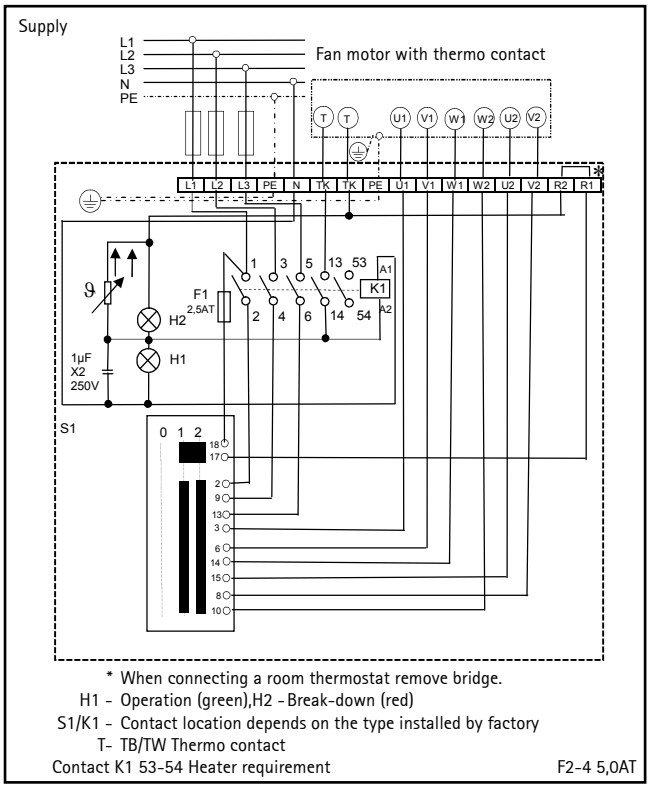

Operating voltage	400 V
Control voltage	230 V
Capacity, max.	8 A
Weight	0,9 kg
Degree of protection	IP 54

Automatic restart when winding temperature drops (motor).
Restart by setting multistage switch to 0 position and then select desired speed.

Note:

Without switches for complete protection we do not give motor warranty!
When the winding temperature is being exceeded without a complete motor protection switch, the motor can get badly damaged.

Thermistor-type motor protection switches for 3 x 230 V available on request.

A1 Ü controller (without explosion-proof switch)

As full motor protection for single-speed LH motors, explosion-proof configuration.

The A1Ü controller must be installed outside the hazar-dous area.

Operating voltage	3 x 400 V
Control voltage	230 V
Capacity, max.	2,7 A
Weight	0,6 kg
Degree of protection	IP 55

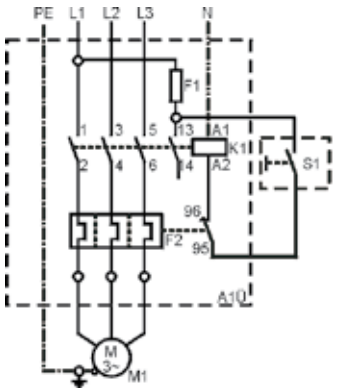

1 explosion-proof switch
2 A1Ü relay
3 Explosion-proof fan

K1 Auxiliary contactor
F1 Control fuse
F2 Therm. motor circuit-breaker
S1 Explosion-proof switch
M1 Fan motor

Installation locations:

A1Ü outside hazardous area

Explosion-proof switch = inside hazardous area

3-stage switch D 3-4 with restart disablement

For 3-speed operation of one or more unit hea-ters with thermistor-type motor protection.

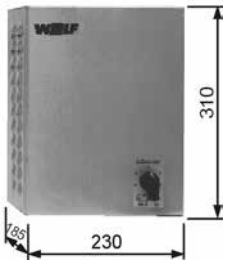

Operating voltage	400 V
Control voltage	230 V
Current, max.	4 A
Weight	8,0 kg
Degree of protection	IP 20

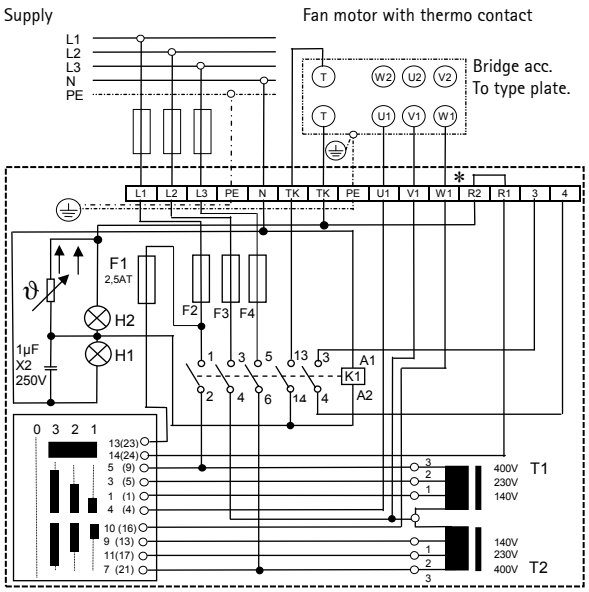

* When connecting a room thermostat remove bridge.
H1 - Operation (green),H2 - Break-down (red)
S1/K1 - Contact location depends on the type installed by factory
T- TB/TW Thermo contact
Contact 3/4 -Heater requirement

F2-4 = D5-1 – 1,25AT (6,3x32mm)

Latched shutdown if winding overheats (motor). Restart by setting multistage switch to 0 positi-on and then select desired speed.

Note:

Without switches for complete protection we do not give motor warranty!
When the winding temperature is being exceeded without a complete motor protection switch, the motor can get badly damaged.

Thermistor-type motor protection switches for 3 x 230 V available on request.

5-stage switch D 5...

For 5-speed operation of one or more unit heaters with thermistor-type motor protection with restart disablement.

Dimensions

Type		D5-1	D5-3	D5-7	D5-12	D5-19
Width	A	150	230	230	230	310
Height	B	200	310	310	310	385
Depth	C	175	185	185	185	225

Type		D5-1	D5-3	D5-7	D5-12	D5-19
Operating voltage	V	400	400	400	400	400
Control voltage	V	230	230	230	230	230
Current, max.	A	1	2	4	7	12
Weight	kg	4,5	7,0	9,0	19,0	27,0
Protection	IP	40	20	20	20	20

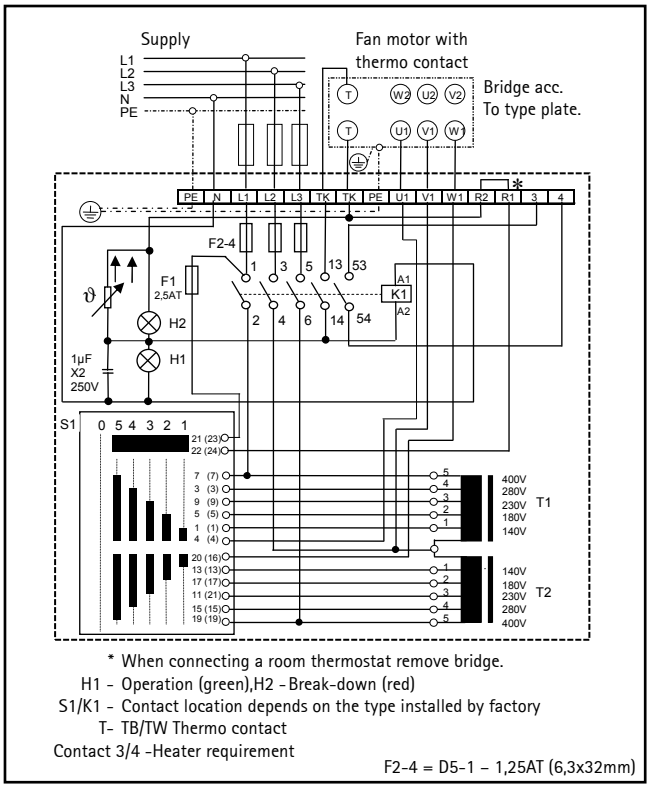

Latched shutdown if winding overheats (motor). Restart by setting multistage switch to 0 position and then select desired speed.

3-stage switch E 3-7T with restart disablement

For 3-speed operation of one or more unit heaters with single-phase AC motors with thermistor-type motor protection.

Operating voltage	230 V
Current, max.	7 A
Weight	4,5 kg
Degree of protection	IP 40

Latched shutdown if win ding overheats (motor). Restart by setting multistage switch to 0 position and then select desired speed.

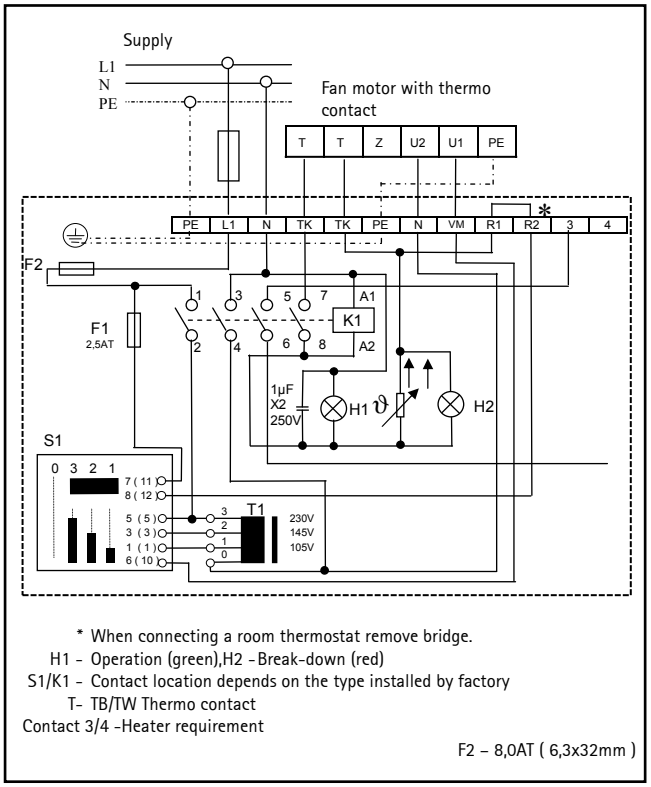

Note:

Without switches for complete protection we do not give motor warranty!
When the winding temperature is being exceeded without a complete motor protection switch, the motor can get badly damaged.

Thermistor-type motor protection switches for 3 x 230 V available on request.

Switching controllers LH

5-stage switch E 5-7T
with restart disablement

For 5-speed operation of one or more unit heaters with single-phase AC motors wit thermistor-type motor protection and restart disablement.

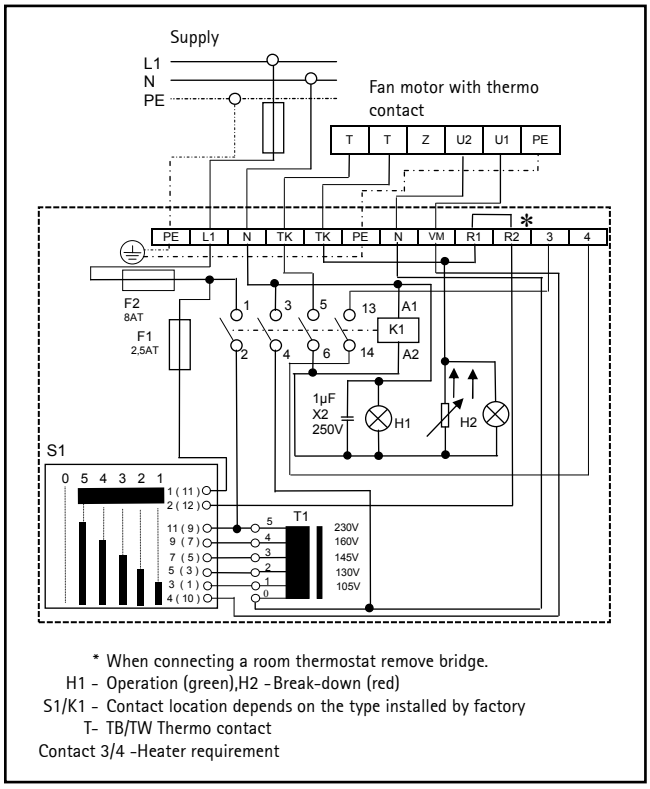

Operating voltage	230 V
Current, max.	7 A
Weight	4,5 kg
Degree of protection	IP 40

Automatic restart when winding temperature drops (motor). Restart by setting multistage switch to 0 position and then select desired speed.

Note:

Without switches for complete protection we do not give motor warranty!
When the winding temperature is being exceeded without a complete motor protection switch, the motor can get badly damaged.

Thermistor-type motor protection switches for 3 x 230 V available on request.

Switching controllers LH-EC

Stepless speed controller 0-10 V

For stepless operation of one or several unit heaters with EC-motor.

Up to 10 LH-ECs can be steplessly operated with one speed controller.

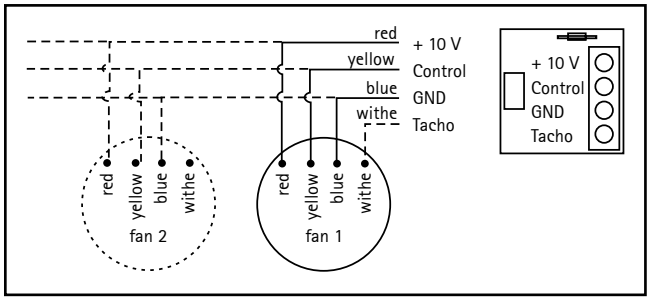

Operating voltage	10 V (DC)
Control voltage	0-10 V (DC)
Current, max.	1,1 mA
Resistance	0-10 kOhm (lin)
Weight	0,1 kg
Degree of protection	IP 54

Actuators for mixed air

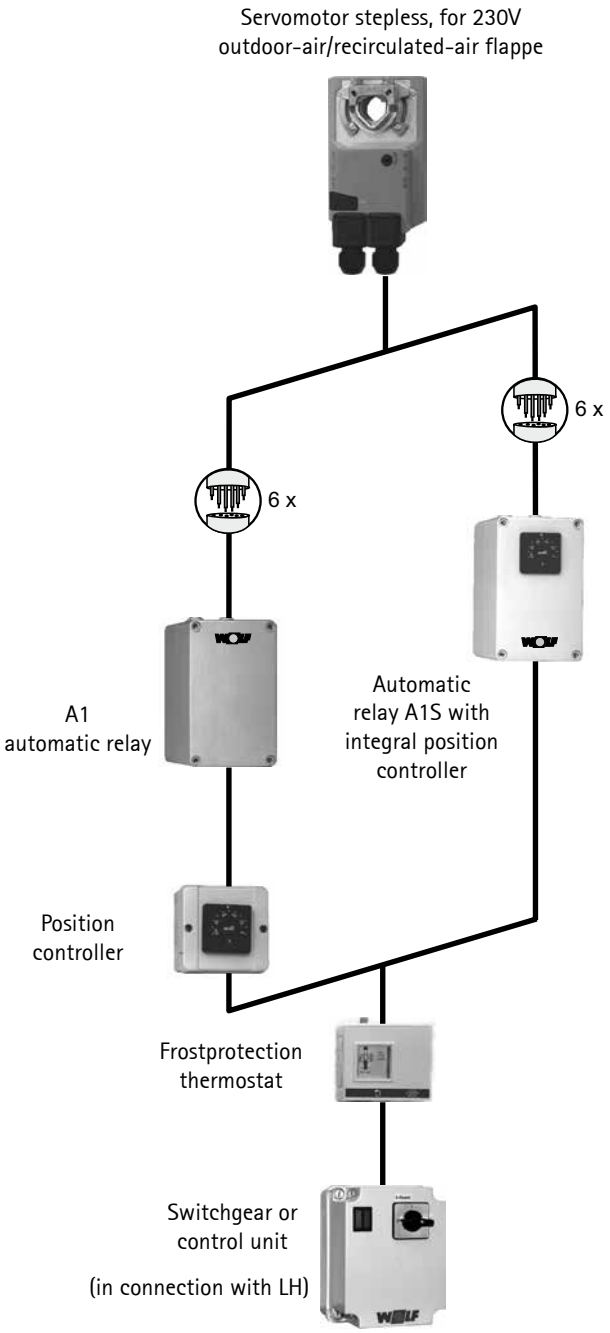

OPEN/CLOSED actuator 230 V

For motor-actuated operation of fresh air damper in conjunction with A1 automatic relay.

LH-EC / LH starts up → fresh air damper opens

LH-EC / LH shuts down → fresh air damper closes
or antifreeze watchdog trips

Stepless actuator 230 V

For stepless, motor-actuated operation of fresh air/return air dampers in conjunction with A1 automatic relay and a position controller in the control cabinet or surface mounted or integrated in the A1S automatic relay.

LH-EC / LH starts up → fresh air damper opens to preset setting, return air damper closes to the corresponding setting.

LH-EC / LH shuts down → fresh air damper closes, return air damper opens or antifreeze watchdog trips 100%.

Automatic controllers for damper actuators

Automatic relay, A1

Auxiliary relay for automatic actuation of the outdoor-air flap with 230 V servomotor for „open/close".

When the LH-EC / LH switches off or the frost-protection thermostat trips, the A1 automatic relay moves the servomotor to the „closed" position. When the LH switches on the A1 moves the servomotor to the „open" position.

Control voltage	230 V
Capacity, max.	1,5 kW
Weight	0,5 kg
Degree of protection	IP 54

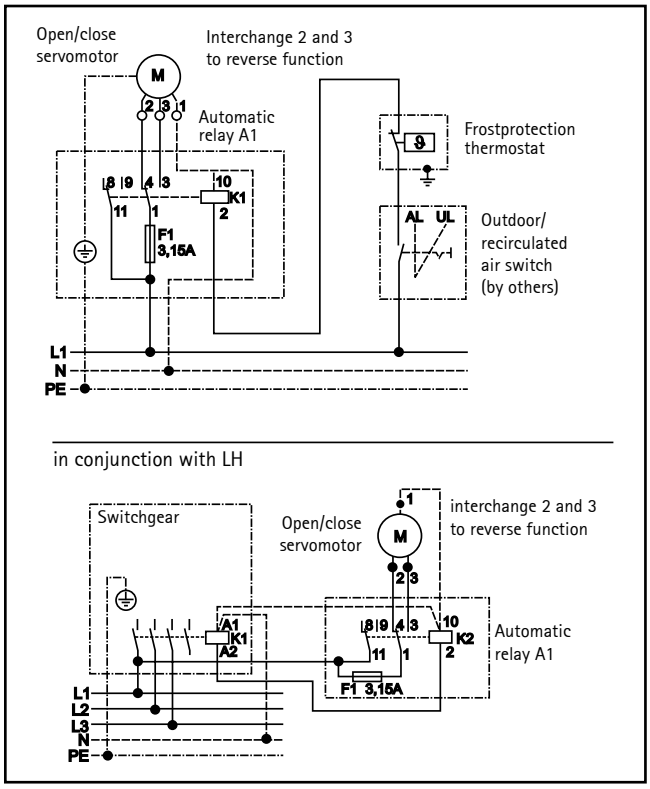

Automatic relay, A1S

Auxiliary relay with integral position controller for automatic actuation of the mixed-air flap with 230 V servomotor for stepless positioning.

The automatic relay A1S switches the actuator to the position set on the position transmitter, if the LH-EC / LH-unit is switched off or if the anti-frost thermostat is activated. Switching on the LH-unit, the actuator switches to the position set at the position transmitter.

Control voltage	230 V
Capacity, max.	1,5 kW
Weight	0,5 kg
Degree of protection	IP 54

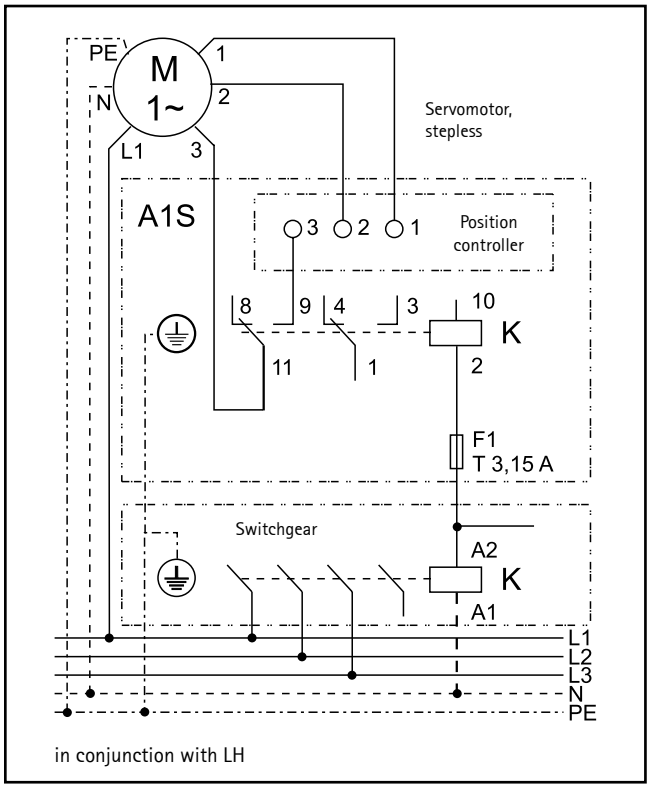

Room Thermostat

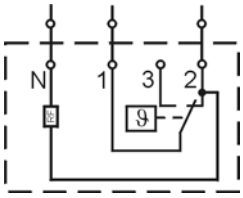

Plastic housing 75 x 75 x 25mm for surface mounting.
Switching capacity: heating 10(4) A, cooling 5(2) A at 230 V / 50 Hz, thermal feedback.

Temperature range 5 - 30 °C

Switching differential 0,5 K

Degree of protection IP 30

Room thermostat with summer/winter switch

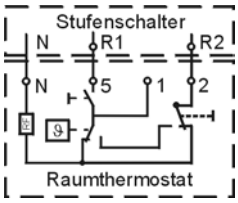

Plastic housing 75 x 75 x 25mm for surface mounting.
Switching capacity: heating 10(4) A, cooling 5(2) A at 230 V / 50 Hz, thermal feedback.

Temperature range 5 - 30 °C

Switching differential 0,5 K

Degree of protection IP 30

Room thermostat, industrial grade

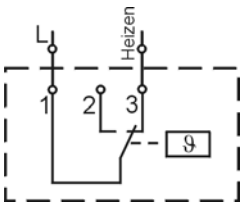

Plastic housing 145 x 112 x 68mm for surface mounting.

Switching capacity 16(4) A at 230 V / 50 Hz

Temperature range 0 - 40 °C

Switching differential ±0,75 K

Degree of protection IP 54

Thermostatic timer with week program

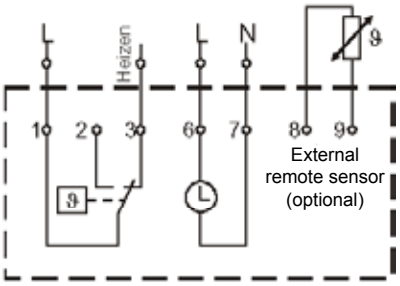

Plastic housing 132 x 82 x 32mm for installation in plug-in base; day and night temperatures can be adjusted separately.

Temperature setback can be adjusted by 2 - 10 K

Switching capacity 10(4) A at 230 V / 50 Hz

Temperature range 5 - 40 °C

Switching differential can be adjusted by ±0,1 - 3 K

Degree of protection IP 20

Frost-protection thermostat / Intermediate terminal box

LH-EC / LH

Remote sensor for room thermostat clock

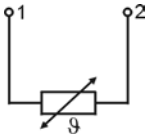

Plastic housing 52 x 50 x 35mm for installation in plug-in base.

Degree of protection IP 54

Frost-protection thermostat

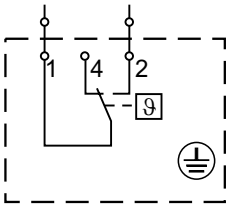

If the air discharge temperature drops below a preset value the frost-protection thermostat switches off the LH-EC / LH to prevent frost damage to the heat exchanger. The LH-EC / LH restarts automatically when the air discharge temperature increases.

The frost-protection thermostat must be wired in series with the thermal contacts!

Switching capacity 10 A at 230 V / 50 Hz

Range of adjustment 2 °C to 20 °C

Switching differential 2,5 K

Degree of protection IP 43

Dimensions W x H x D 85 x 75 x 40mm

Intermediate terminal box

Intermediate terminal box for parallel wiring of up to three LH heaters with 3 x 400V, 50Hz motors.

Degree of protection IP 54

Dimensions W x H x D 105 x 170 x 112mm

All-pole Isolator AR8

fitted and wired

BML ventilation programming module

- Room-/weather-compensated temperature control
- LCD with background illumination
- Easy plain text guide through the menus
- Control by rotary selector with key function
- Four function keys for frequently used functions (Info, Temperature- , speed adjustment, fresh air proportion)
- Installation either inside the ventilation control unit or, as remote control, in a wall mounting base
- Only one BML ventilation programming modul required to control up to 7 zones
- Demand-optimised boiler water temperature demand via eBUS
- eBus interface

Wall mounting base

- Wall mounting base for use with the BML ventilation programming module as remote control.

LM1 ventilation control unit
(incl. room temperature sensor)

- Ventilation module to control air heaters with a two-stage motor
- Easy controller configuration by selecting one of the preset system versions
- Demand-optimised room temperature control via air heater speed
- Control of the heating circuit pump
- Control of one heat source
- Demand-optimised boiler water temperature demand via eBUS
- eBus interface with automatic energy management
- BML ventilation programming module to clip into LM2 ventilation control unit

LM2 ventilation control unit

- Ventilation module LM2 to control the room temperature via speed or mixer
- 2-stage motor control in connection with ventilation module LM1 or stepless motor control via 0-10 V signal in connection with EC fan
- Easy controller configuration by selecting one of the preset system versions
- Control of one heat source
- Demand-optimised boiler water temperature demand via eBUS
- eBus interface with automatic energy management
- BML ventilation programming module to clip into LM2 ventilation control unit
- Control of mixed air damper (in connection with servomotor 24V)
- Induction louvre control

Outside-, ceiling- or room temperature sensor

Radio clock

- For synchronising the clock inside the control unit with the DC77 transmitter

Radio clock with outside temperature sensor

- For synchronising the clock inside the control unit with the DC77 transmitter, and capturing the outside temperature

Differential pressure switch

- Differential pressure switch, loose, for on-site control.

5-stage switch 0-10 V

- Electronic five-stage speed controller, input 0-10V

Supply air sensor and sensor retainer

- for measuring the supply air temperature

ISM 5 - LON-interface module

- to connect ventilation modules LM1 and LM2 to a building management system applying LON-standard network variables

LM2 ventilation control with BML in connection with LH-EC

Description:

This configuration is used for heating buildings in conjunction with air heaters. The room temperature is captured by a sensor and the fan, heating circuit pump and heat source are switched on or off subject to demand.

There is the possibility of pre-selecting mixing valve or speed control.

Example:
Unit heater, heating with room temperature control

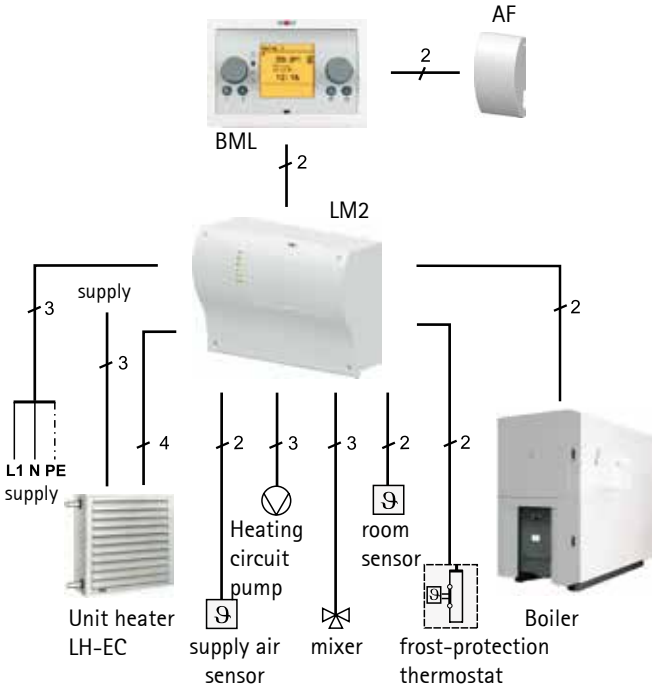

Installation diagram:

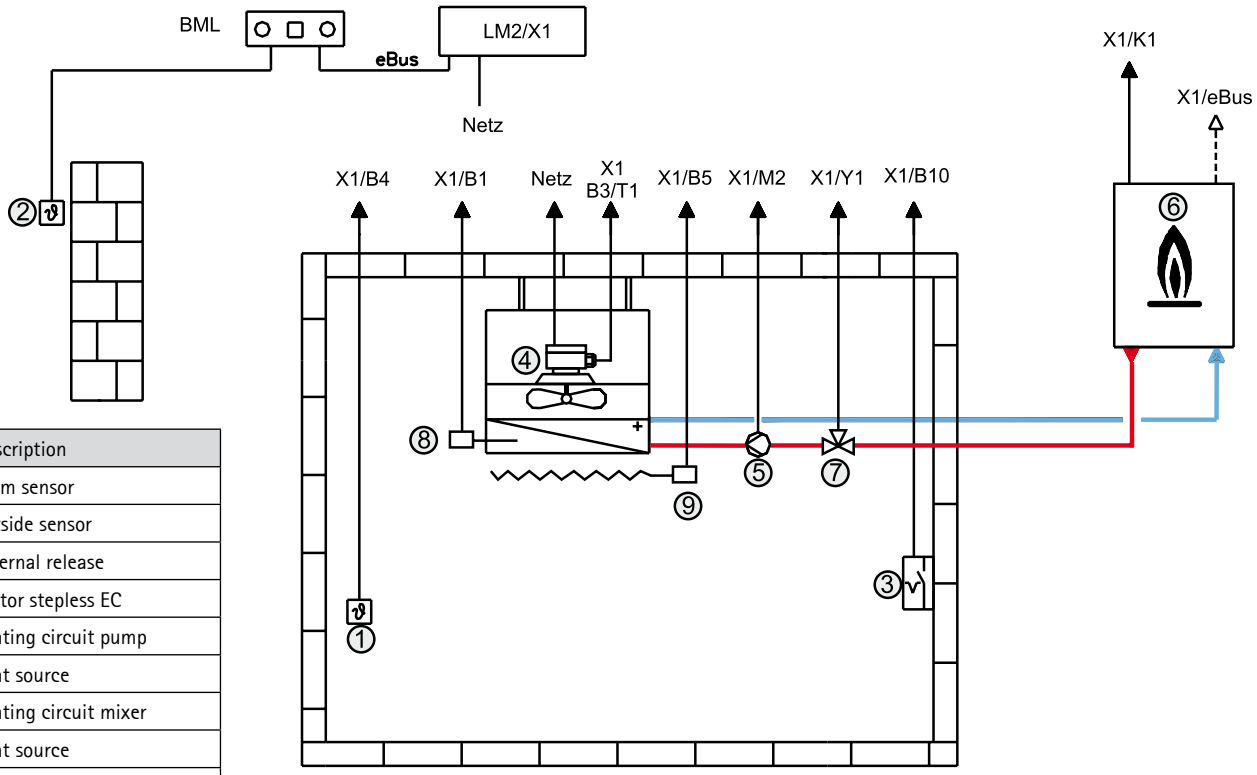

Nr.	Description
1	room sensor
2	outside sensor
3	external release
4	Motor stepless EC
5	heating circuit pump
6	heat source
7	heating circuit mixer
8	heat source
9	frost-protection thermostat

LM1 ventilation control unit with BML

Description

This configuration is used for heating buildings in conjunction with air heaters. The room temperature is captured by a sensor and the fan, heating circuit pump and heat source are switched on or off subject to demand.

If the temperature deviation (set room temperature to actual room temperature) is low, the fan is operated in stage 1. If the temperature deviation is greater, it is switched to stage 2.

Example:
Unit heater, heating with room temperature control

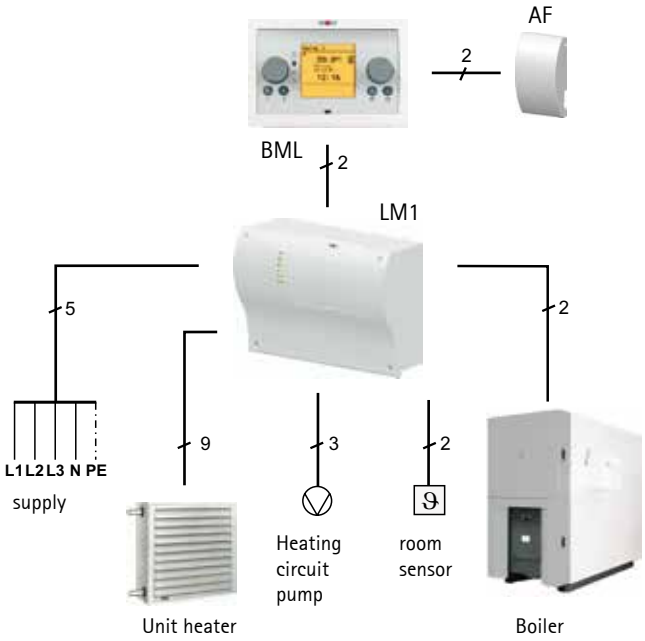

Installation diagram:

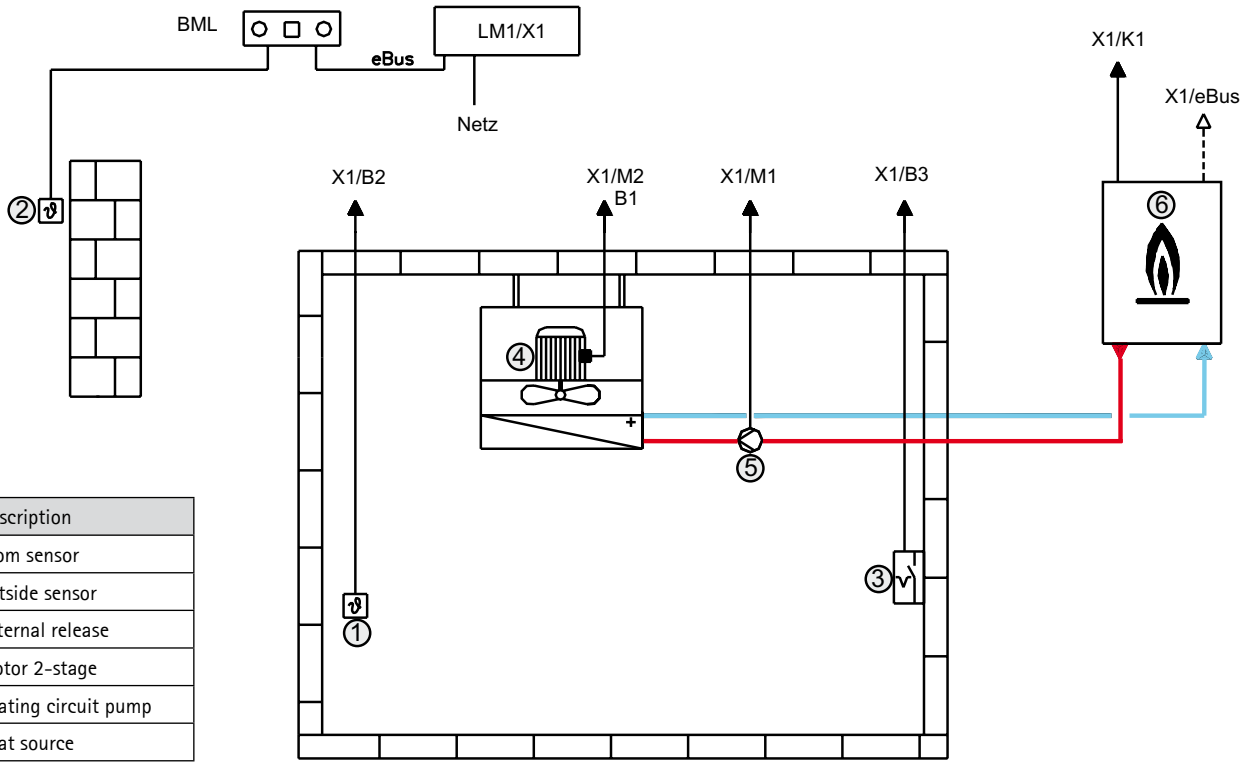

Nr.	Description
1	room sensor
2	outside sensor
3	external release
4	motor 2-stage
5	heating circuit pump
6	heat source

LM1 ventilation control and LM2 with BML

Description:

This configuration is used for heating buildings in conjunction with air heaters. The room temperature is captured by a sensor, and the fans, heating circuit pump, heating circuit mixer and heat source are switched on or off subject to demand.

Example:
Unit heater, heating with room temperature control,
Mmixer control, motor control, 2-stage

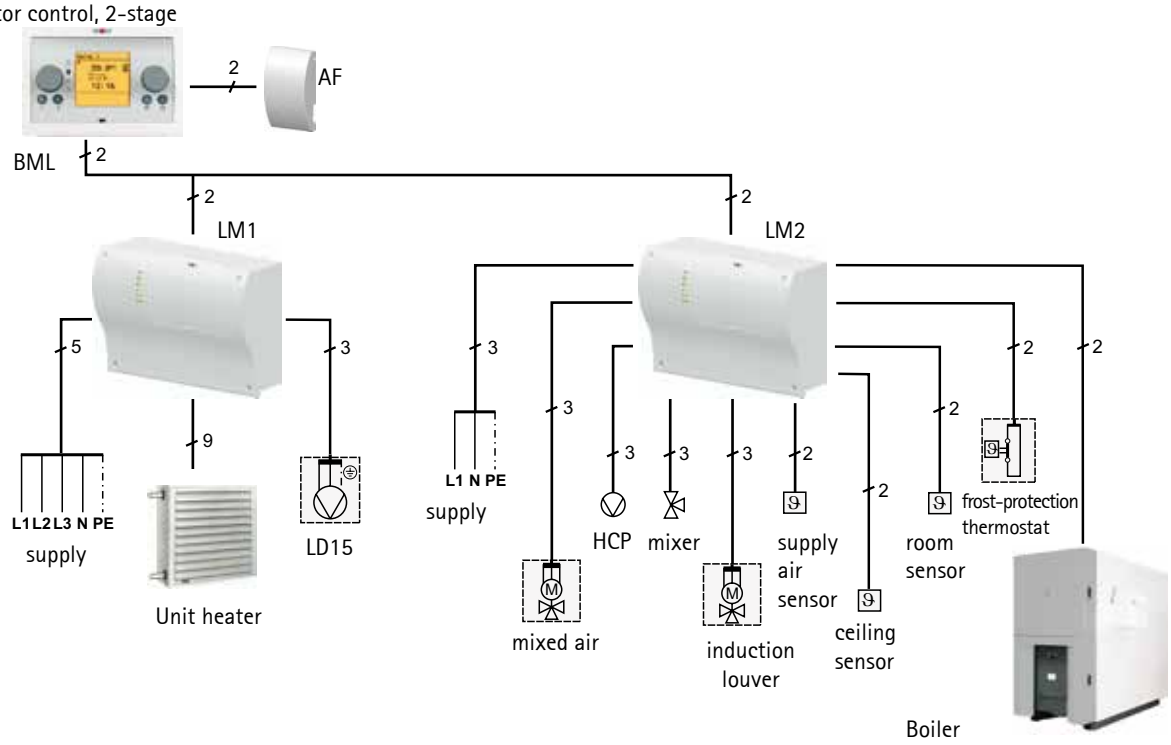

Installation diagram:

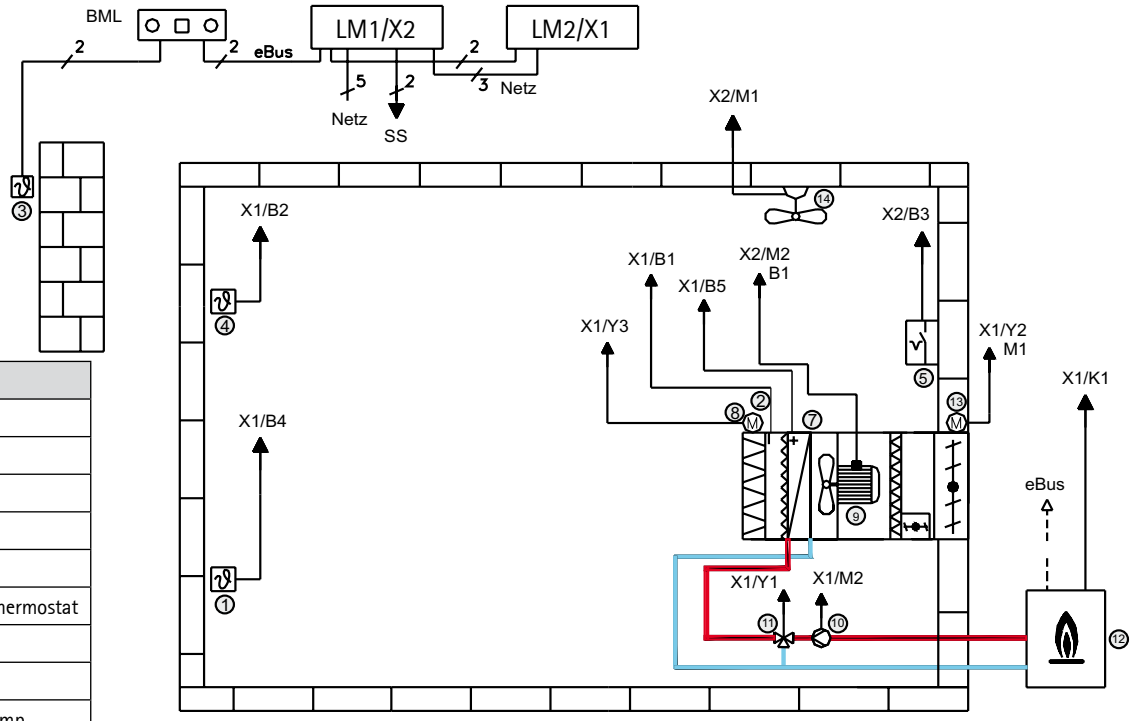

Nr.	Description
1	room sensor
2	supply air sensor
3	outside sensor
4	ceiling sensor
5	External release
7	Frost-protection thermostat
8	induction louver
9	motor 2-stage
10	heating circuit pump
11	heating circuit mixer
12	heat source
13	mixed air damper
14	LD15, ceiling fan

LM2 ventilation control unit with BML

Description:

This configuration is used for heating buildings in conjunction with air heaters. The room temperature is captured by a sensor, and the fans, heating circuit pump, heating circuit mixer and heat source are switched on or off subject to demand. The extract air fan is enabled subject to the fresh air proportion.

Example:
Unit Heater, heating with room temperature control,
mixer control, motor control with electronic 5-stage speed regulator

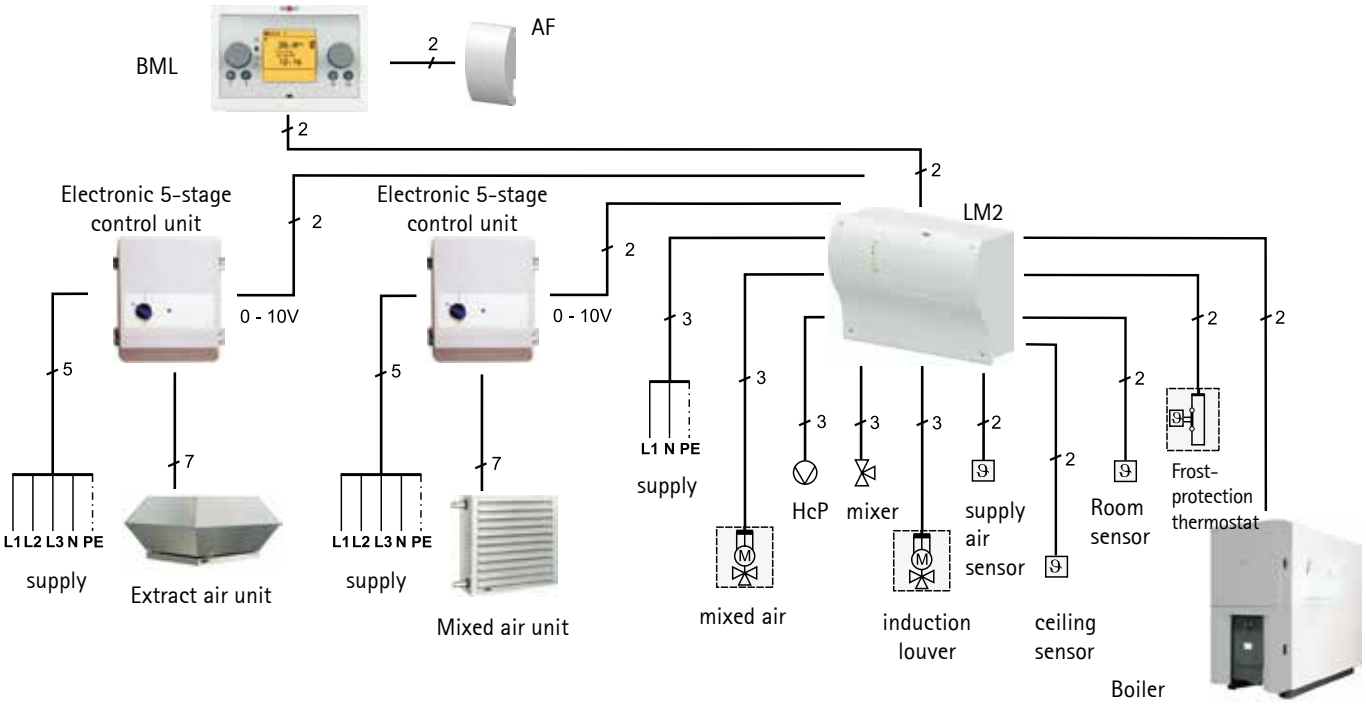

Installation diagram:

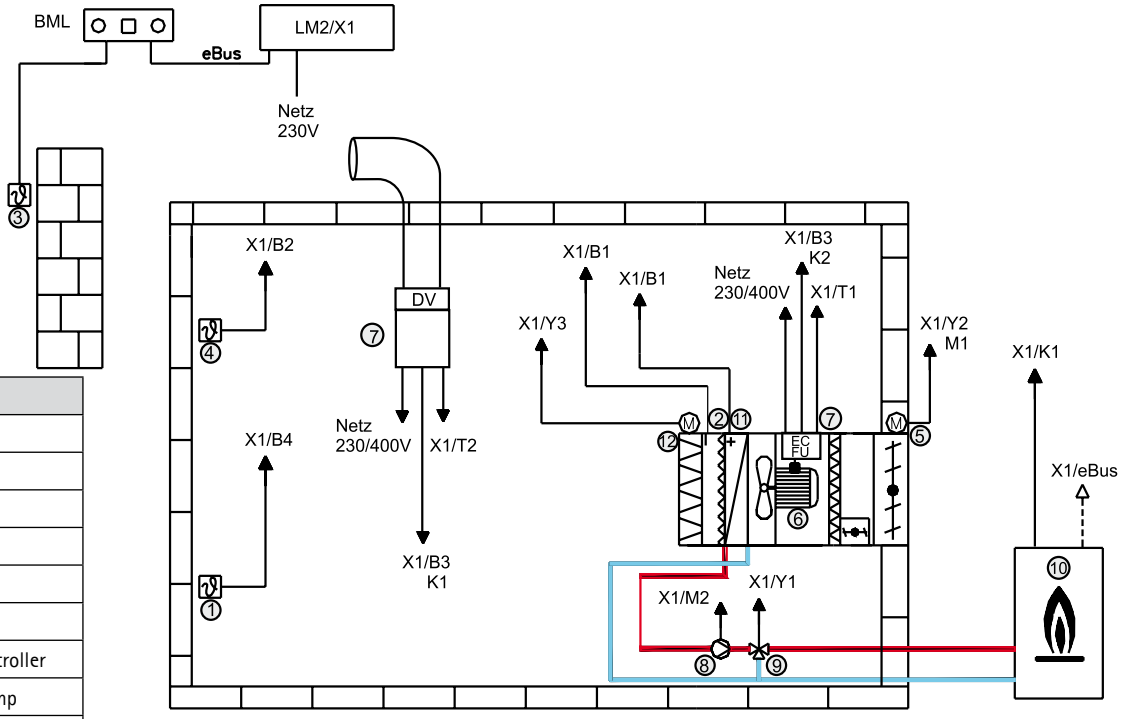

Nr.	Description
1	room sensor
2	supply air sensor
3	outside sensor
4	ceiling sensor
5	mixed air damper
6	fan
7	5-stage speed controller
8	heating circuit pump
9	heating circuit mixer
10	heat source
11	frost-protection thermostat
12	induction louver

5-stage electronic switch 0 - 10V

5-stage switch 0-10 V:

L=170 B=220 H=315

Switch type	D5-2F	D5-4F	E5-6F
Voltage	400 V	400 V	230 V
Capacity, max.	2 A	4 A	6 A
Weight	7,4 kg	11,0 kg	5,2 kg
Degree of protection	IP 21	IP 21	IP 20

Wiring diagram D5-.....

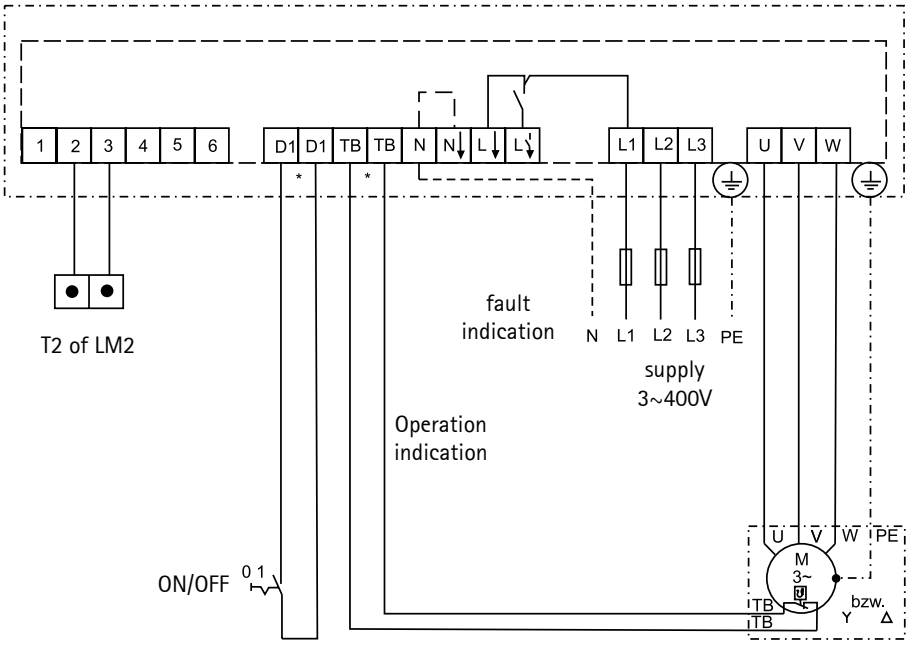

Wiring diagram E5-6F

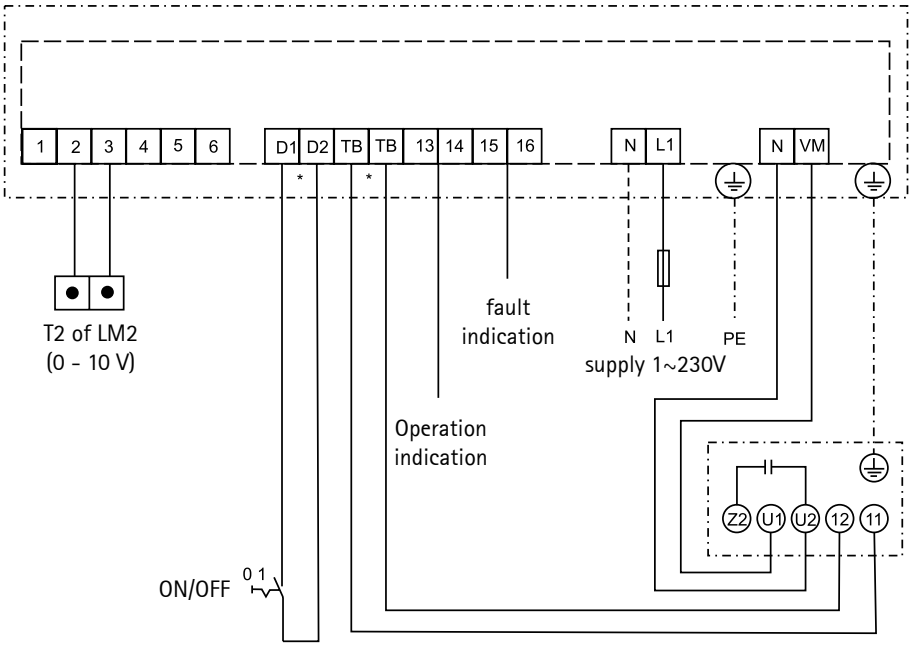

Note:

LH unit heaters of different sizes and ratings can be connected in parallel to a common switching controller with full motor protection: the configuration limit is imposed by the maximum permissible switching capacity or the maximum permissible current rating of the controller.

If multiple unit heaters are connected it is essential to ensure that the motor terminals are connected in parallel and that the thermo contacts and antifreeze thermostats are connected in series.

LH unit heaters with thermo contacts and antifreeze thermostats

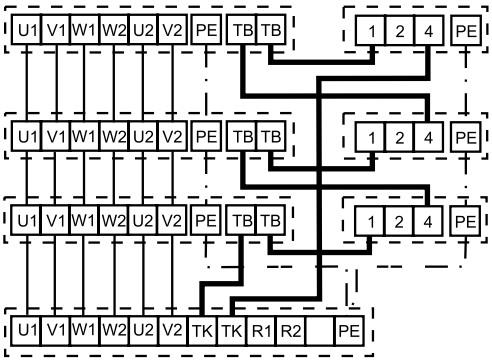

LH-single-stage/multistage switch or automatic controller (e.g. DS-2 single-stage/multistage switch)

LH unit heaters with thermostat

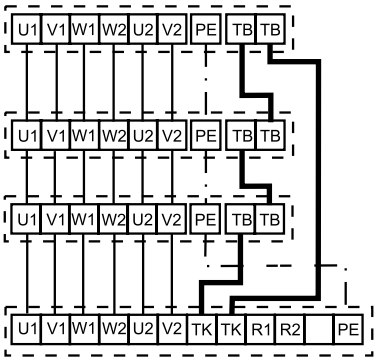

LH-single-stage/multistage switch or automatic controller (e.g. DS-2 single-stage/multistage switch)

Number of conductors for connecting cables

Connection from	Switching controller								
to	D1-2	DS-2	D3-4	D5...	E3-7T	E5-7T	A1Ü	A1	A1S
Mains supply	5	5	5	5	3	3	5	-	-
LH motor 3 x 400 V	6	9	6	6	-	-	4	-	-
LH motor 1 x 230 V	-	-	-	-	5	5	-	-	-
Room thermostat	3/4 [1]	3/4 [1]	3/4 [1]	3/4 [1]	3/4 [1]	3/4 [1]	-	-	-
Room thermostat timer	5	5	5	5	5	-	-	6 [2]	
Automatic relay A1	4	4	4	4	4	4	-	-	-
A1S autom. controller	4	4	-	4	-	4	-	-	-
Actuator	-	-	-	-	-	-	-	4	6
Explosion-proof switch	-	-	-	-	-	-	3	-	-

[1] In conjunction with a room thermostat with thermal feedback signal.
[2] 2-stage
Use 3-core cable for connection to antifreeze thermostat.

Single-phase a.c. motors 230 V/ 50 Hz

Single-phase a.c. motors are supplied adjusted to high speed up to LH 63 as standard.

Thermo contacts in series with motor winding speed control with 5-stage switch type E5-3 for LH 25, 40, 63.

Thermo contact in series with motor winding

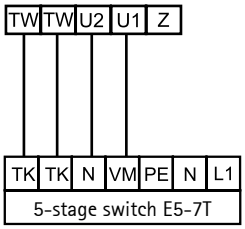

LH-ATEX
Three-phase motor
3 x 400 V/ 50 Hz

1U = brown
1V = blue
1W = black

2U = red
2V = grey
2W = orange

K1 = white
K2 = white

Three-phase motor with 2 speeds via Δ/Y-switching.
Full motor protection via integrated thermistors.
Remove jumpers if speed controller is used.

High speed:
Δ-switching

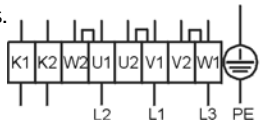

Low speed:
Y-switching

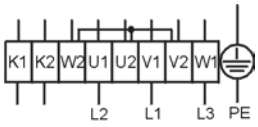

Electrical connection LH-EC

Regulation via stepless speed controller 0 - 10 V

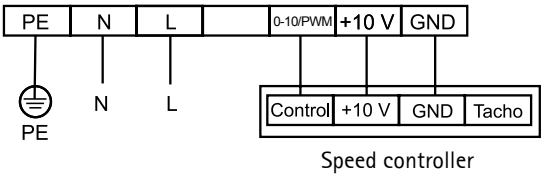

Parallel connection of several LH-EC units via stepless speed controller

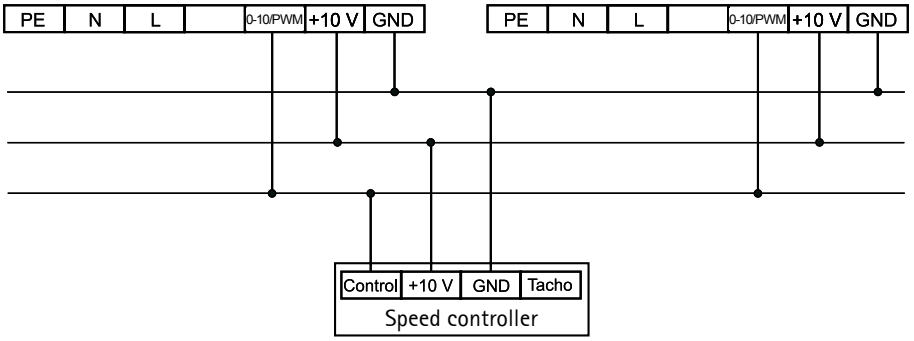

Up to 10 LH-ECs can be steplessly operated with one speed controller.

Regulation LH-EC 40 - 100 via ventilation module LM2

Parallel connection of several LH-EC- 40 - 100 units via ventilation module LM2

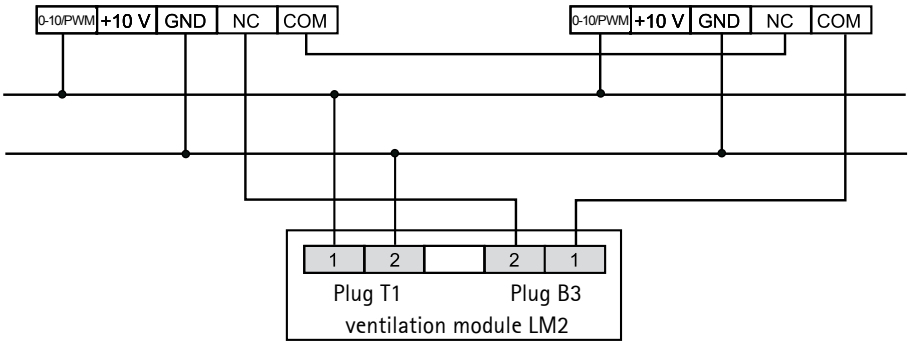

Up to 5 LH-EC - 40 - 100 units can be steplessly operated with one ventilation module LM2.

Regulation LH-EC 25 via ventilation module LM2 upon request!

Consulting advice horizontal air throws LH-EC / LH

The horizontal air throw is the distance travelled by the warm air discharged by the wall-mounted LH-EC / LH unit heater

with discharge louvres or spread discharge | **with discharge louvres or discharge cross**

LH-EC / LH 25

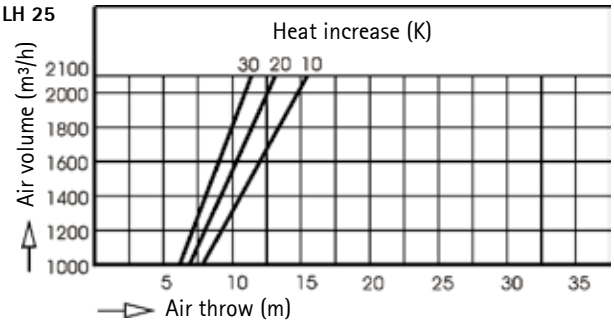

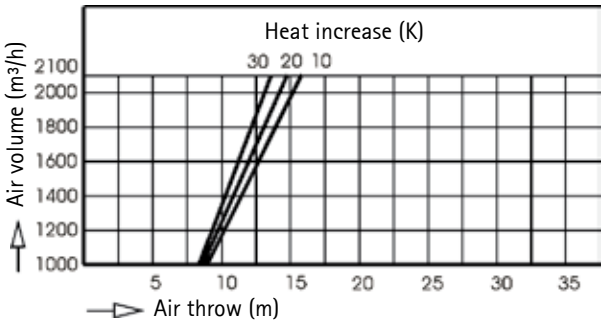

LH-EC / LH 40

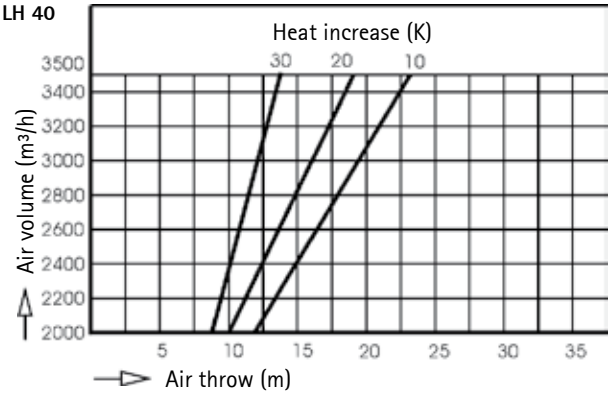

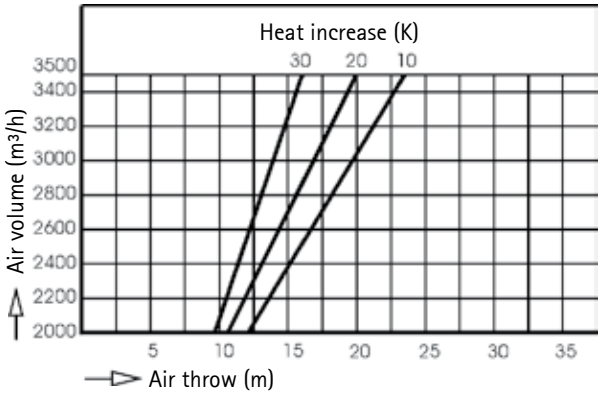

LH-EC / LH 63

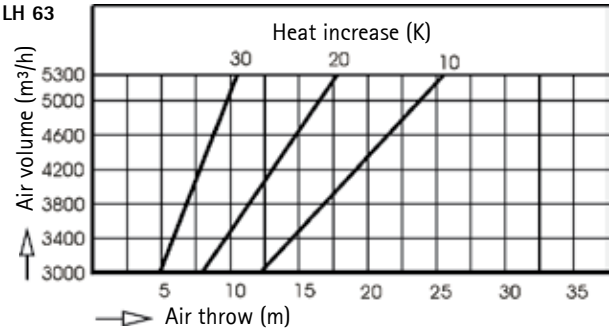

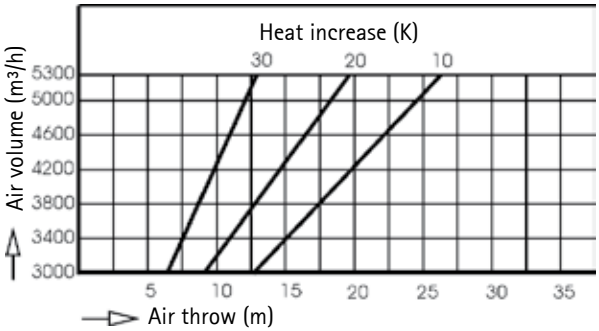

LH-EC / LH 100

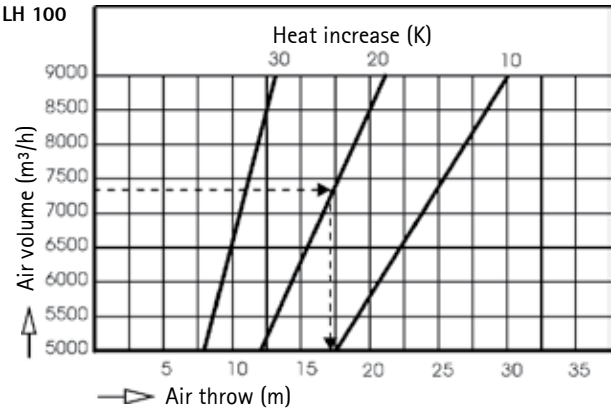

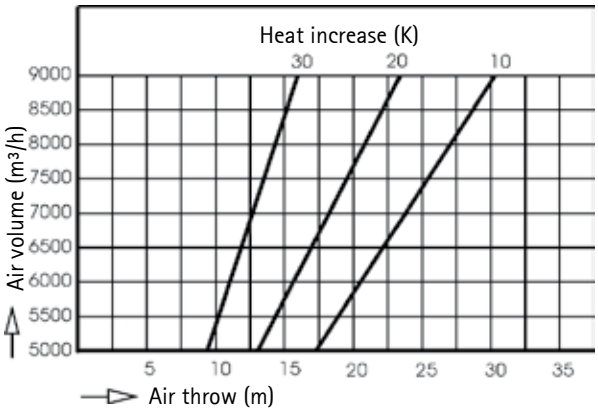

Example: LH 100 with discharge louvre; $\Delta t_A = t_{Aoff} - t_{room}$ = 20 K; air volume = 7 300 m³/h
Result: horizontal air throw = 17 metres

Consulting advice Vertical Air throws LH-EC / LH

The vertical air throw is the distance travelled by the warm air discharged by the LH-EC / LH unit heater

with discharge louvres/wide or spread discharge | **with discharge louvres cone/discharge nozzle**

LH-EC / LH 25

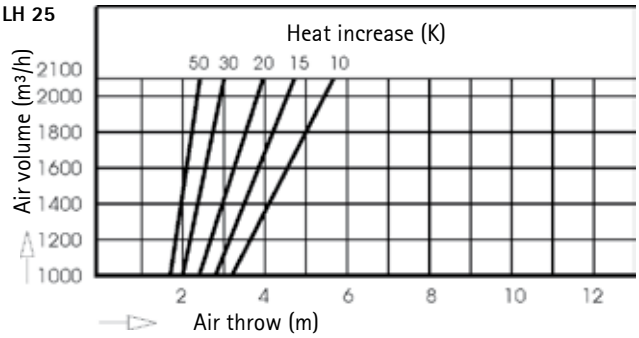

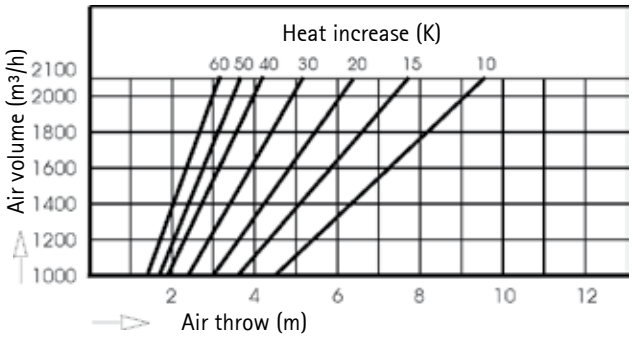

LH-EC / LH 40

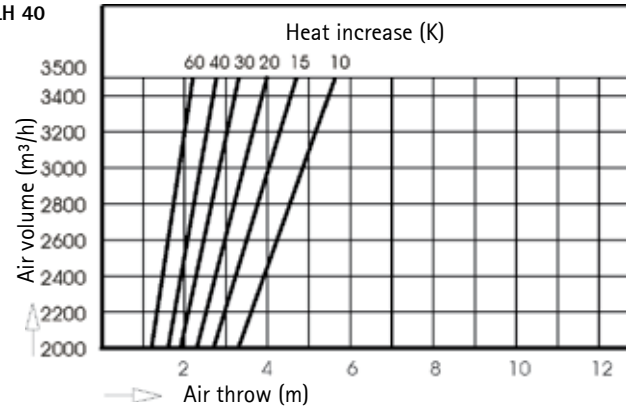

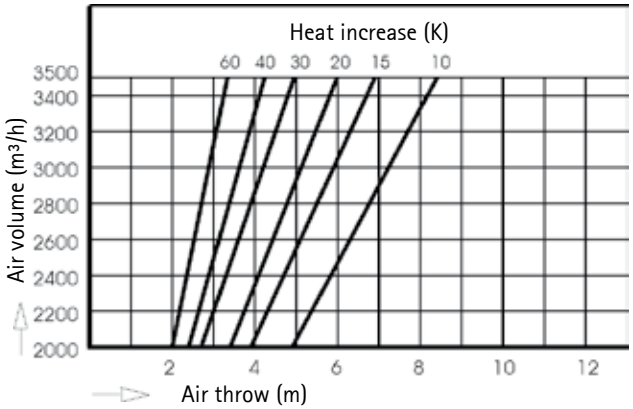

LH-EC / LH 63

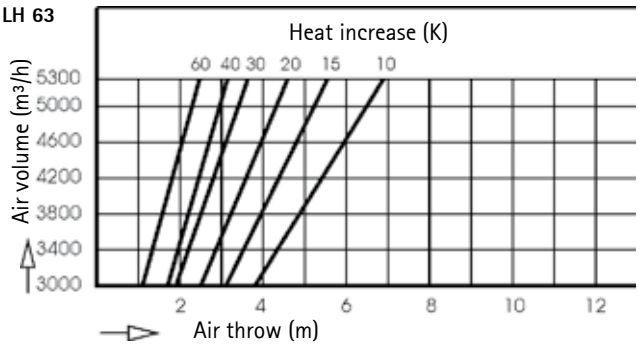

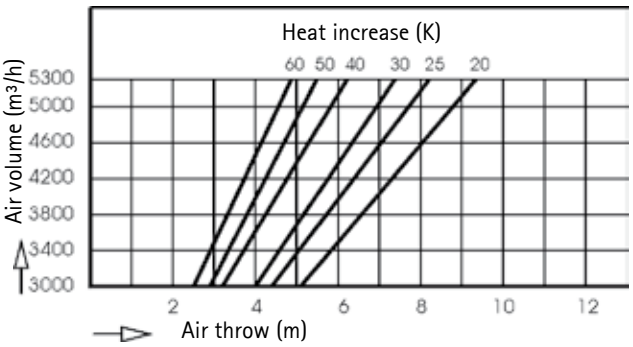

LH-EC / LH 100

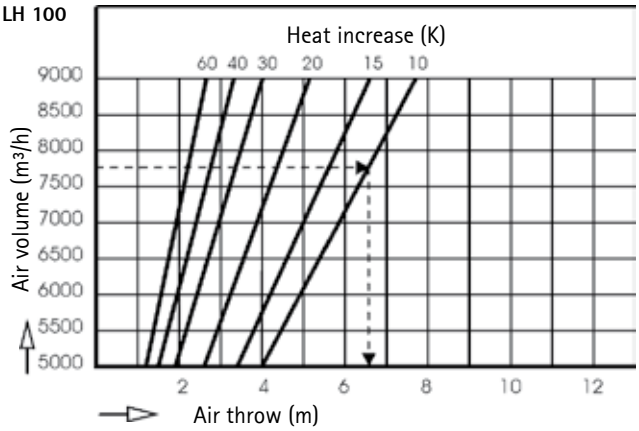

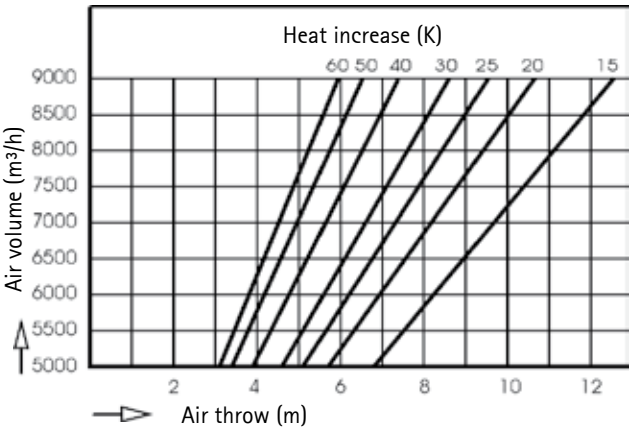

Example: LH 100 with discharge louvre; $\Delta t_A = t_{Aoff} - t_{room}$ = 20 K; air volume = 7 750 m³/h
Result: horizontal air throw = 6,6 metres

with discharge louvres and discharge cross

LH-EC / LH 25

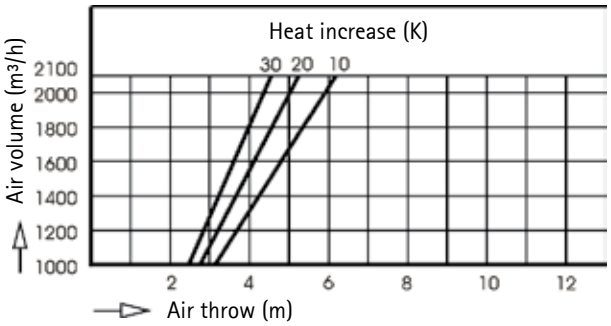

LH-EC / LH 40

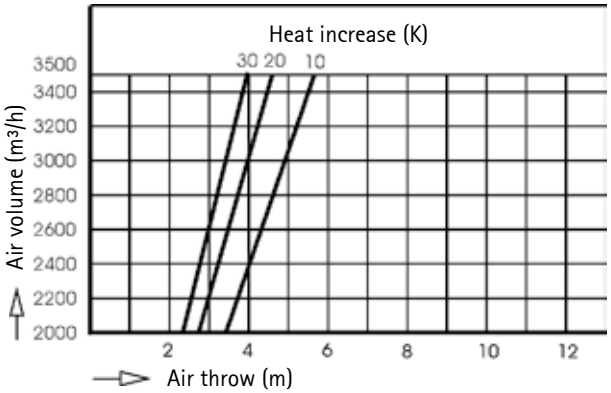

LH-EC / LH 63

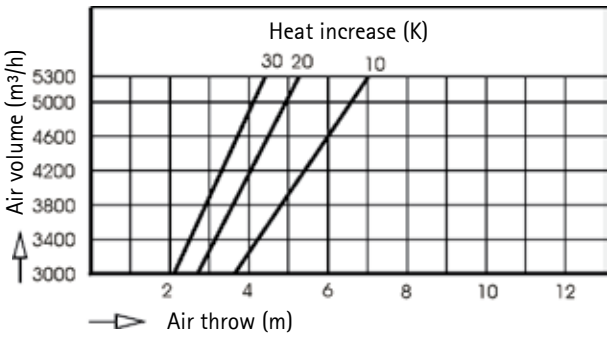

LH-EC / LH 100

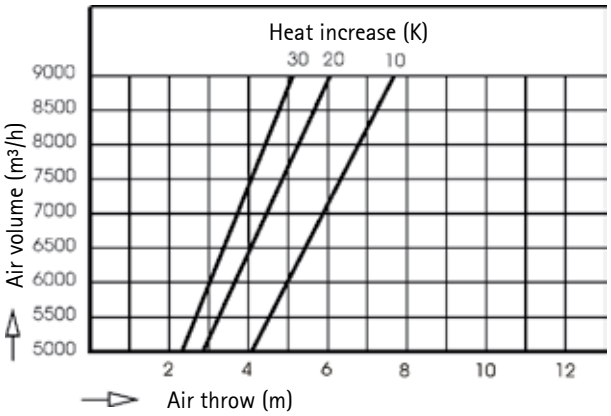

Key to symbols

$\dot{V}$	= air volume	m³/h
$\dot{V}_B$	= reference air volume	m³/h
$\dot{V}_0$	= catalogue air volume	m³/h
$\dot{V}_{eff}$	= effective air volume	m³/h
t_{on}	= air intake temperature	° C
t_{off}	= air discharge temperature	° C
t_{Aoff}	= effective air discharge temperature	° C
Δt_A	= air heat increase	K
Δt_W	= temperature difference of water	K
W	= water flow rate	m³/h
$\dot{Q}$	= thermal output	kW
$\dot{Q}_0$	= catalogue thermal output	kW
$\dot{Q}_{eff}$	= effective thermal output	kW
Δp	= air resistance	Pa
Δp_W	= hydraulic resistance	kPa
e	= factor for heat-rise	
q_{eff}	= factor for heating output	
l_{eff}	= factor for air volume	
K	= accessory index of entire unit	

Conversion:

1 Pa = 0,1 mm WS
1 kPa = 1000 Pa

Accessory index k:

Mixing box	3
Four-way discharge	2
Discharge nozzle	2
Discharge cone	2
Wide-spread discharge	0
Filter, clean	5
Intake duct	2
Rain protection hood	2
Weatherproof louvre	7
Non-return flap	3
Fresh air box	0
Return air box	0
Intake hood	1
Discharge cross	1
Ind.louvre (wall-mounted)	2
Ind.louvre (ceiling-mounted)	3

To calculated k for accessories

$$k = 0{,}1 \bullet \Delta p \bullet \left(\frac{\dot{V}_B}{\dot{V}}\right)^2$$

Δp = air resistance (Pa) at V (m³/h)
$\dot{V}$ = air volume (m³/h) at Δ p (Pa)

LH	$\dot{V}_B$
25	2000 m³/h
40	3000 m³/h
63	6000 m³/h
100	10000 m³/h

Characteristics graph

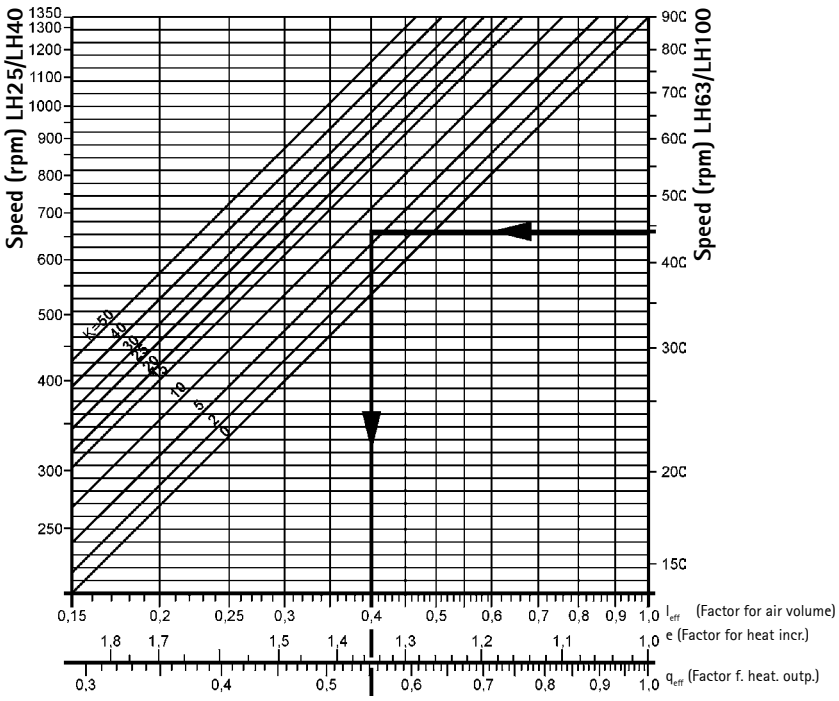

Example

Assuming:

LH 100 Type4, t_{on} = -5°C, LPHW 50/40

From performance table on Page 18:
(always take figures for high speed, because factors correcting for operation at lower speed are taken into account in the characteristics graph).

V_0 = 7700 m³/h
$\dot{Q}_0$ = 96,1 kW
t_{off} = 29 °C
Δt_{A0} = (29+5) K = 34 K

Mains supply 3 x 400 V Δ
5-stage switch, set to stage 1
from speeds table on Page 55: 440 rpm

Accessories: mixing box k = 3;
Accessories installed by others: Fresh air duct

Δp = 10 Pa at 5000 m³/h

$k = 0{,}1 \bullet 10 \bullet \left(\frac{10000}{5000}\right)^2$

k = 4

k = 3 + 4 = 7

LH 100, 440 rpm, k = 7

from characteristics graph:

l_{eff} = 0,4
e = 1,35
q_{eff} = 0,55

Find:

Effective air volume	$\dot{V}_{eff}$
Effective air heat increase	Δt_{Aeff}
Effective air discharge temp.	$t_{A\,off}$
Effective heating output	$\dot{Q}_{eff}$
Water flow rate	W
Hydraulic resistance	Δp_w

Result:

$\dot{V}_{eff} = \dot{V}_0 \bullet l_{eff}$ = 7700 m³/h • 0,4 = 3080 m³/h

$\Delta t_{A\,eff} = \Delta t_{A0} \bullet e$ = 34 K • 1,35 = 45,9 K

$t_{A\,off} = t_{on} + \Delta t_{A\,eff}$ = -5 + 45,9 °C = 40,9 °C

$\dot{Q}_{eff} = \dot{Q}_0 \bullet q_{eff}$ = 96,1 kW • 0,55 = 52,9 kW

$$w = \frac{0{,}86 \bullet \dot{Q}_{eff}}{\Delta t_w} = \frac{0{,}86 \bullet 52{,}9}{10} = 4{,}5 \text{ m³/h}$$

Δp_w (see diagram, Page 20) = 8,5 kPa

Speeds table / sound pressure level LH-EC

Speeds table / Sound pressure levels as a function of speed

	LH -EC 25			LH -EC 40			LH -EC 63			LH -EC 100		
Control voltage V	Speed min^{-1}	Sound power level dBA	Sound pressure level* dBA 2 m	Speed min^{-1}	Sound power level dBA	Sound pressure level* dBA 2 m	Speed min^{-1}	Sound power level dBA	Sound pressure level* dBA 2 m	Speed min^{-1}	Sound power level dBA	Sound pressure level* dBA 2 m
10	1500	72	59	1350	74	62	1000	74	63	900	72	63
9	1450	70	58	1330	74	62	950	73	62	860	71	62
8	1320	67	55	1300	73	61	850	69	59	810	70	60
7	1170	64	52	1170	70	58	750	66	55	720	66	57
6	1020	61	49	1010	66	54	640	62	51	610	63	53
5	860	56	44	850	61	50	530	58	47	510	58	48
4	700	50	39	670	55	43	430	52	41	410	54	45
3	540	43	32	490	49	37	320	44	34	305	47	40
2	370	34	26	330	41	28	210	34	27	205	39	32
1	220	25	22	160	39	25	105	33	26	100	38	32

* Sound pressure levels measured in room with average absorption, enclosed space approx. ca. 1500 m^3

Speeds table / sound pressure level

Speeds table
for LH fan motors

Line voltage	Stufe	LH 25	LH 40	LH 63	LH 100
Single-stage switch		Speed rpm	Speed rpm	Speed rpm	Speed rpm
3 x 400 V Δ	-	1350	1350	900	900
3 x 400 V Y	-	1000	1000	700	700
3 x 230 V Δ	-	1000	1000	700	700
Two-stage switch					
3 x 400 V Δ	II	1350	1350	900	900
3 x 400 V Y	I	1000	1000	700	700
3 x 230 V Δ	II	1350	1350	900	900
Three-stage switch					
3 x 400 V Δ	III	1350	1350	900	900
230 V Δ	II	1150	1150	800	750
140 V Δ	I	750	800	550	500
3 x 400 V Y	III	1000	1000	700	700
230 V Y	II	700	800	500	500
140 V Y	I	400	450	300	300
1 x 230 V	III	1350	1350	900	
145 V	II	1250	900	750	
105 V	I	750	600	500	
Five-stage switch					
3 x 400 V Δ	V	1350	1350	900	900
280 V Δ	IV	1280	1300	850	840
230 V Δ	III	1210	1200	800	750
180 V Δ	II	1050	1090	710	620
140 V	I	800	800	550	500
3 x 400 V Y	V	1000	1000	700	700
3 x 230 V Δ	IV	800	840	590	540
	III	660	700	500	440
	II	490	550	400	350
	I	360	400	300	270
1 x 230 V	V	1350	1350	900	
160 V	IV	1290	1140	750	
145 V	III	1230	960	640	
130 V	II	1160	780	540	
105 V	I	750	650	500	

Speeds table / Sound pressure levels as a function of speed

LH 25			LH40			LH63			LH100		
Speed min^{-1}	Sound power level dBA	Sound pressure level* dBA 2 m	Speed min^{-1}	Sound power level dBA	Sound pressure level* dBA 2 m	Speed min^{-1}	Sound power level dBA	Sound pressure level* dBA 2 m	Speed min^{-1}	Sound power level dBA	Sound pressure level* dBA 2 m
1350	74	63	1350	78	67	900	77	66	900	82	71
1290	73	62	1300	77	66	850	76	65	840	80	69
1280	73	62	1200	75	64	800	74	63	750	78	67
1230	72	61	1140	74	63	750	73	62	700	76	65
1210	72	61	1090	73	62	710	71	60	620	74	63
1160	71	60	1000	72	61	700	71	60	540	71	60
1050	68	57	960	71	60	640	70	59	440	66	55
1000	68	57	840	68	57	590	68	57	350	61	50
860	64	53	780	66	55	560	67	56	270	56	45
800	63	52	700	64	53	540	66	55	220	51	40
660	58	47	580	60	49	500	64	53	160	44	33
530	53	42	550	58	47	400	59	48			
490	52	41	530	58	47	360	57	46			
430	49	38	490	56	45	300	53	42			
360	45	34	400	51	40	280	52	41			
320	43	32	380	50	39	210	45	34			
240	36	25	280	44	33						

* Schalldruckpegel gemessen in einem Raum mittlerer Absorption, Raumgröße ca. 1500 m³

Consulting advice Notes on configuration LH-EC / LH

Approximate determination of heat requirement

A precise calculation of the heat requirement in accordance with DIN 4701 is generally recommended as well for unit heaters. But it happens repeatedly that a precise calculation is not possible because of either lack of time or incomplete infos about the building's construction. With the help of the underneath diagramme it is possible to determine the approximate heat requirement.

Building construction: Exterior walls: 25 cm masonry equivalent
Roofing: lightweight concrete or equivalent
Heating in return air operation

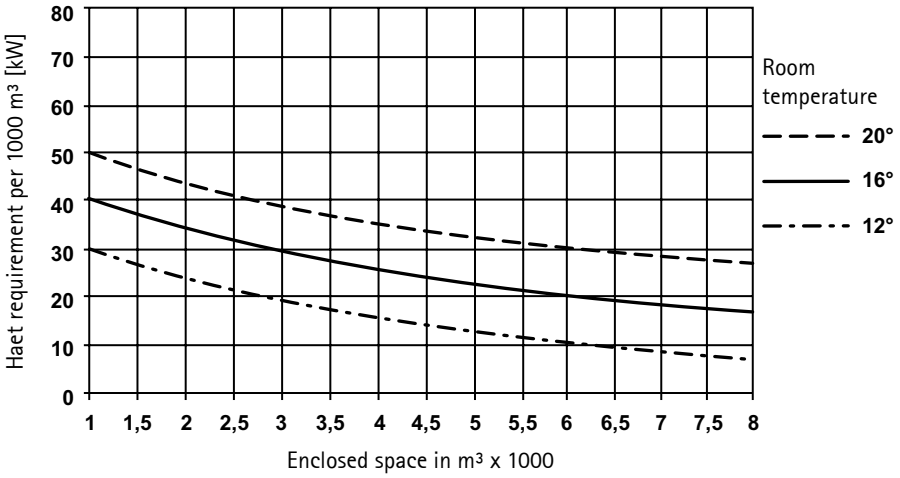

Correction factors
Additional charge:
For corrugated roofing, not insulated ..... +40%
For corrugated roofing, thin insulation (20 mm) ..... +20%
For wooden roof with tar-paper or sheet metal ..... +20%
For metal exterior wall, not insulated ..... +20%
For extremely narrow buildings ..... +20%
For large windows in exterior wall ..... +10%

Deduction:
For exterior wall 75% adjoining another building ..... -15%
For exterior wall 50% adjoining another building ..... -10%
For exterior wall without windows, solid brick ..... -30%
For heated upper storey ..... -30%
For heated annex on each side ..... -10%

General notes on planning

Required air volume (m³/h) at least 2.5 and preferably 3-4 times enclosed space.
Make sure a current of warm air is not directed against persons.
Distance between unit heaters 10-15 m.
Distance from floor for wall-mounted units at least 2.5 m and max. 4 m.
Take air throws into account.
Use wide-spread discharge if unit heater is not far from opposite wall.
Use discharge cone or induction louvre if air throw of ceiling-mounted unit with standard discharge louvres is insuffient.
Use four-way discharge in low-ceilinged room if distance from bottom of discharge louvres to floor is less than approx. 2.5 m.

Wall-mounted unit

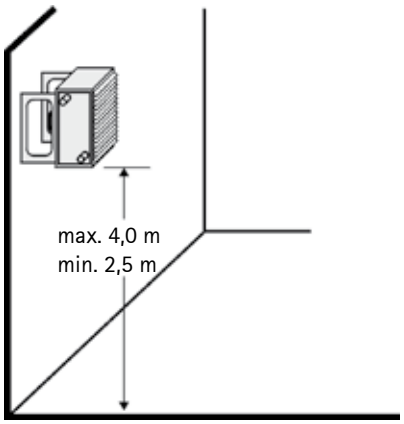

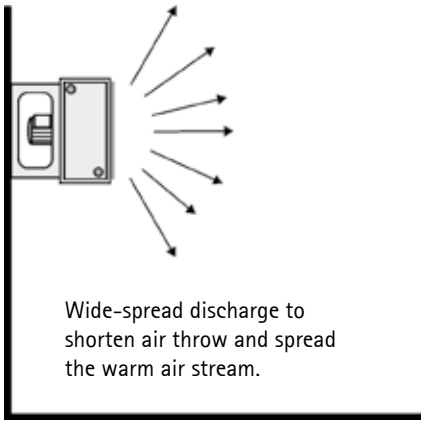

Ceiling-mounted units

Clearance for LH ceiling-mounted units in metres

LH-EC / LH	Ceiling-mounted device to ceiling-mounted device	Ceiling-mounted device to wall
25	7 - 9	3 - 4
40	9 - 11	3 - 5
63	11 - 13	4 - 6
100	13 - 15	5 - 7

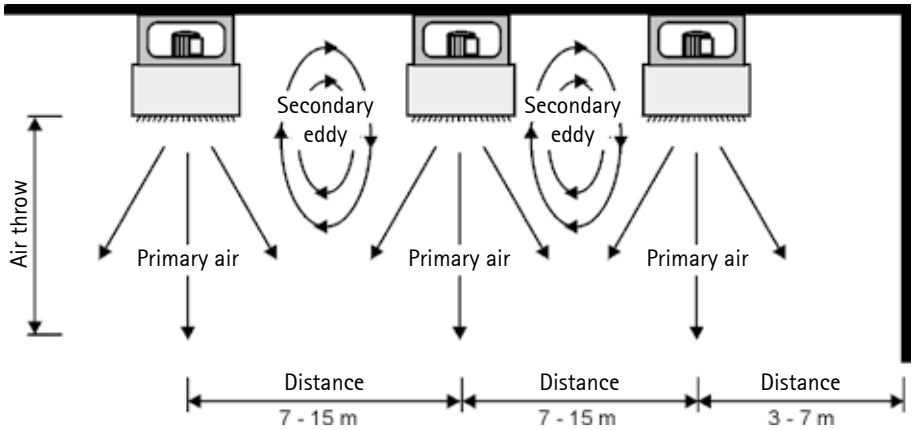

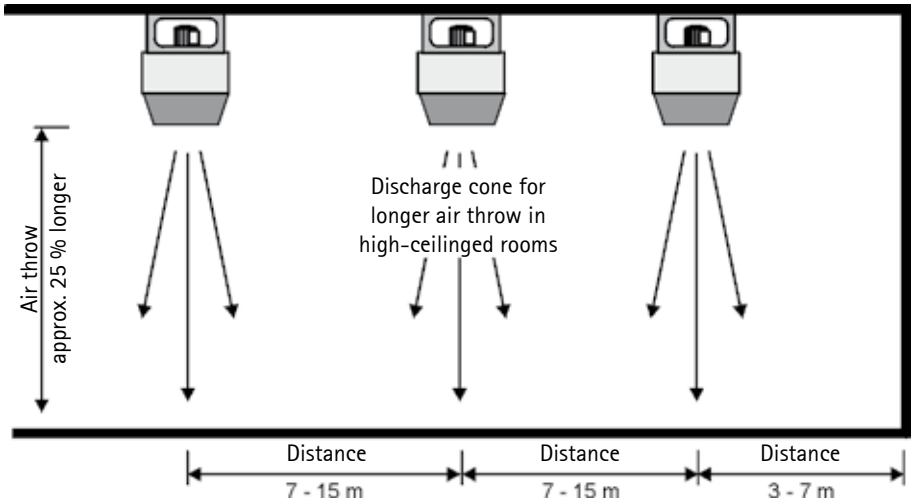

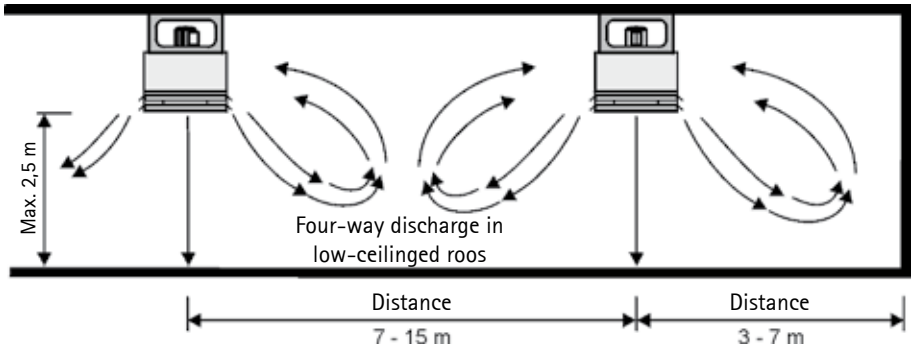

Discharge accessories for optimum air distribution
given the distances as stated above, air heat increase Δt_A (= t_{outlet} - t_{room}) of approx. 25 K and high speed.

LH-EC / LH	25	40	63	100
Distance: discharge to floor				
upt to 2,5 m	Four way discharge	Four way discharge	Four way discharge	Four way discharge
3-4 m	Wide-spread discharge	Wide-spread discharge	Wide-spr. dischar.	Wide-spr. dischar.
4-5 m	Cone	Cone	Standard louvree	Wide-spr. dischar.
5-6 m	Cone	Cone	Cone	Standard louvree
for 6 m	Cone	Cone	Cone	Cone

This accessories table does not apply if the temperature differential Δt_A is superior to 30K, because at this delta penetration is reduced.

Consulting advice Notes on configuration LH-EC / LH

Door-curtain system with discharge nozzle

Position the unit heaters for a door-curtain system close together.
If requirements are high use a double-row array.
Discharge temperature 10-15 K above room temperature.

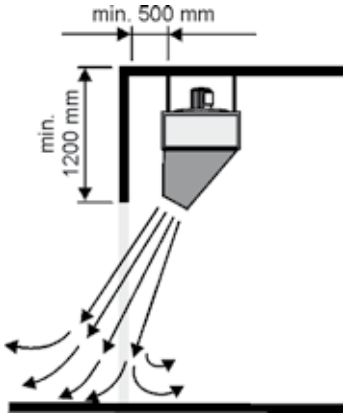

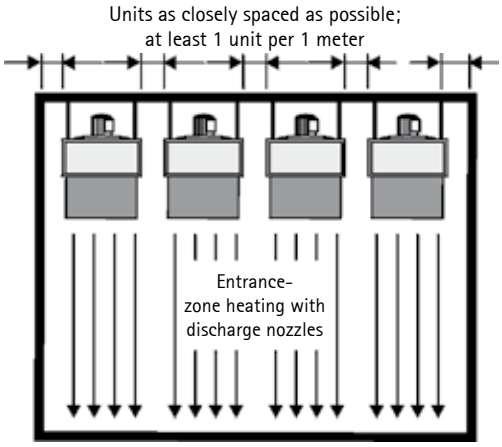

Additional LH-EC / LH unit heater without heat exchanger installed to improve air circulation

Air volumes for unit heaters without heat exchangers

LH-EC / LH		25	40	63	100
Air volume	m³/h	1400/2400	2400/3950	3950/6000	6100/10700
Speed	min^{-1}	1000/1350	1000/1350	700/900	700/900

Consulting Advice on Ceiling Fans LD 15

The air throw of the LD 15 is about 10 metres without stratification. In rooms with a ceiling height exceeding 7 metres, the LD 15 should be mounted vertically offset to achieve sufficient air throws. An LD 15 should be mounted at the highest point of the room to avoid warm air buffers under the ceiling.
By switching off the ceiling fans while the hangar doors are open (e.g. by using door switchers), warm air can better be kept in the room. The ceiling fans should be placed in such way that there are no workplaces directly in the outlet cone.
The distance between the LD 15 units should not exceed 10 metres and the distance to the side walls should not be longer than 5 metres. One LD 15 can be calculated for an area of around 100m².

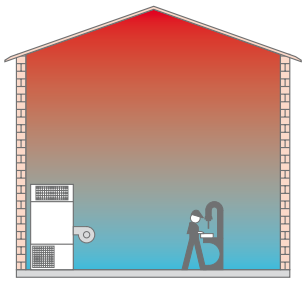

Natural stratification

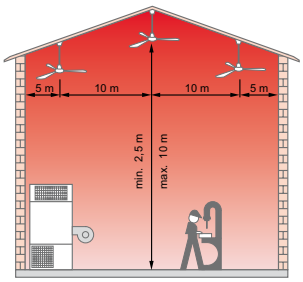

Comparative stratification

Ceiling fan / Accessories LD 15

Ceiling fan LD 15

Depending on ceiling height and local conditions, approximately 2 units per 100m² can be calculated for a return air operation and ceiling installation with statically and dynamically balanced wings. Colour: white RAL 9016

By using ceiling fans in winter, the heat build-up in the ceiling area is pushed into the gathering zone again. Thanks to a better distribution of temperature, comfort increases and energy is saved at the same time. In summer, a comfortable room climate can be created by air circulation.

Technical Data

Type		LD 15
Number of blades		3
Diametre	cm	Ø 142
Unit height	cm	69
Air circulation	m³/h	15.000
Speed	min^{-1}	300
Operating voltage		230 V / 50 Hz
Power consumption	W	75
Current consumption max.	A	0,35
Sound pressure level*	dB(A)	34
Total weight	kg	10,5

* sound pressure level at a distance of 5m, measured in a room with average absorption, room size about 1500m³.

Warm air return control system

With the help of a warm air return control system, each temperature sensor records the surrounding temperature in the floor area and the ceiling area. The ceiling fan is switched on or off depending on the setting of the temperature differential.

Perm. surrounding temperature		**-10 up to 50°C**
Operating voltage		**230 V / 50 Hz**
Current max.		**8 A (4A motor power)**
Switching contact		**1 changeover, relay contact**
Switch-on difference	**Δt On**	**1 bis 10 K (recommended 6 K)**
Switch-off difference	**Δt Off**	**1 bis 10 K (recommended 4 K)**

Note:
When using warm air return control systems, the sensors should not be installed next to doors, windows or uninsulated warm water pipes. The positioning of the sensors and the setting of the temperature differential Dt-On and Dt-Off at the temperature difference circuit are significant for the wellbeing. If possible, it should be optimized by prior testing.

Stepless speed control

Speed control for a stepless operation of maximum **five** (3A) or rather **three** (1,5A) ceiling fans.

Perm. surrounding temperature	**-10 up to 35°C**
Operating voltage	**230 V / 50 Hz**
Current max.	**1,5 A / 3A**

Suspension rod (on request)

To achieve sufficient air throws in high-ceilinged rooms (higher than 7 metres), suspension rods of different lengths are available on request for a vertically offset installation of ceiling fans.

Length - suspension rod	**cm**	**20**	**90**	**150**	**200**
Unit height - ceiling fan	**cm**	**44**	**114**	**174**	**224**

Installation examples

General guidelines:

Always position the Wolf unit heaters in such a way that a current of warm air is not directed against persons and machines.

It is advisable to use a number of small heaters instead of one large unit in order to achieve uniform temperature distribution. If possible, position the units in such a way that the currents of air assit air circulation, instead of counter-acting each other. Free intake of return air must be ensured at all times.

The air throw of Wolf unit heaters should be selected to suit the dimensions of the room. The figures in the performance tables are guideline values which can be varied to suit case-to-case requirements by installing accessories such as discharge cones, wide-spread discharges and four-way discharges.

The sound pressure levels of Wolf unit heaters are very low. The dB(A) values stated in the performance tables are averages measured in a room with average absorption at a distance of 5 metres from the unit heater.

Ambient overheating can cause damage when the motors of ceiling-mounted unit heaters are at a standstill. Consequently, the flow temperature must be limited as follows:

115 °C in conjunction with a filter box
140 °C without externally mounted components

All control and shutoff valves must close automatically when the unit heater shuts down.

Wall-mounted LH-EC / LH

with filter box and brackets

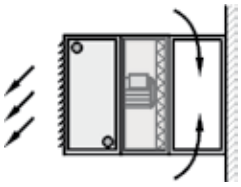

with intake duct for return air

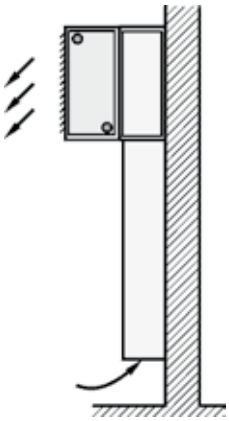

with weatherproof louvre on mixing box

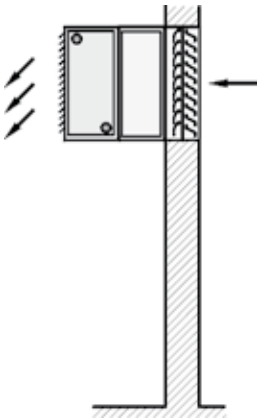

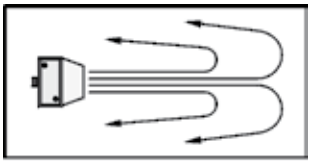

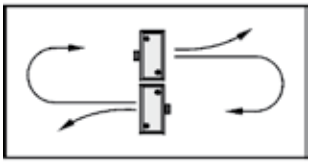

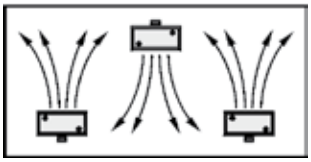

Ceiling-mounted LH-EC / LH

with filter box and brackets

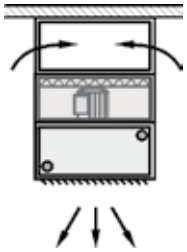

with discharge nozzle

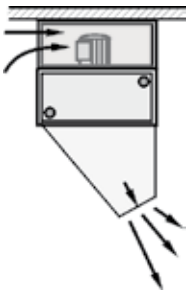

with discharge cone and brackets

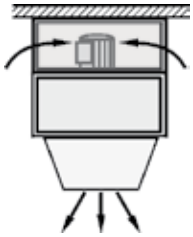

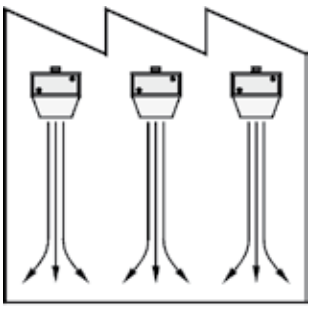

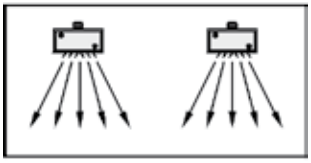

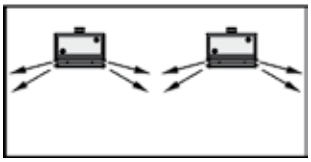

Weights

Weights in kg

Basic units			LH-EC 25 LH 25	LH-EC 40 LH 40	LH-EC 60 LH 60	LH-EC 100 LH 100
LPHW	Unit heater, type 1	Co/Al	24	32	48	76
and	Unit heater, type 2	Co/Al	26	35	51	82
MPHW	Unit heater, type 3	Co/Al	27	36	52	84
	Unit heater, type 4	Co/Al	28	38	54	88
	Unit heater, type 2	st.galv.	53	80	127	186
	Unit heater, type 3	st.galv.	65	85	136	212
	Dampf Unit heater, type D	Co/Al		45	65	97
	Unit heater 6 kW		35	on request	on request	on request
	Unit heater 9 kW		23			
	Unit heater 12 kW		23			
Accessories Intake						
	Mixing box		26	32	42	68
	Return air box		16	28	31	50
	Filter box		13	16	20	37
Accessories Discharge						
	Discharge nozzle		5	7	10	14
	Discharge cone		4	12	19	27
	Wide-spread discharge		4	7	11	16
	Four-way discharge		5	7	13	16
	Discharge cross		0,4	0,5	1,1	1,3
	Induction louvre		3	4	7	9
	Adaption cone				18	26
Miscellan.Mounting brackets (1 set)			3	3	9	9

Notice

Notice

The comprehensive equipment range from system supplier Wolf offers the ideal solution for commercial and industrial buildings, for new build and for modernisation projects alike. The range of Wolf control units fulfils every need where heating convenience is concerned. The products are easy to operate, energy-efficient and reliable. Photovoltaic and solar heating systems can be quickly integrated into existing systems. All Wolf products can be easily and rapidly commissioned and maintained.

Wolf GmbH, PO Box 1380, D-84048 Mainburg, Tel.: +49 (0)8751/74-0, Fax: +49 (0)8751/74-1600, www.wolf-heiztechnik.de

Dealer adress

The competent brand for energy saving systems

Part-No.: 4800211

2015/10 GB
Subject to modifications